Conveyor chain catalogue

RENOLD

Superior Chain Technology

www.renold.com

RENOLD

Table of Contents

Section 1 - Conveyor Products and Dimensions

Conveyor chain introduction 5-7
BS conveyor chain dimensions 8-9
BS rollers and connecting links 10
Extra strength conveyor chain 11-12
Extra strength rollers and connecting links 13
BS attachments 14-20
BS spigot pins 21
BS outboard rollers 22
ISO conveyor chain 23-27
ISO rollers 28
ISO connecting links 29
ISO attachments 30-34
Agricultural chain 35-36
Agricultural chain attachments 37-40
Agricultural chain - standard sprockets 41-42

Section 2 - Conveyor Sprocket Details

Conveyor sprocket introduction 44-45
3000 lbf, 13000 Newton sprockets 46
4500 lbf, 20000 Newton sprockets 47
6000 lbf, 27000 Newton sprockets 47
7500 lbf, 33000 Newton sprockets 47
12000 lbf, 54000 Newton sprockets 48
15000 lbf, 67000 Newton sprockets 48
24000 lbf 107000 Newton sprockets 48
30000 lbf, 134000 Newton sprockets 48
Welded Steel Chain 49
Welded Steel Drag Chain 50

Section 3 - Conveyor Chain Installation and Maintenance

Installation and Maintenance guidelines and advice 52-67

Section 4 - Conveyor Chain Designer Guide

Conveyor chain specification guidelines and advice 69-106

Section 5 - Industrial Applications and Special Engineered Chain

Examples of a few industries that benefit from Renold Conveyor Chain 108-139

RENOLD

SECTION 1

CONVEYOR PRODUCTS AND DIMENSIONS

Renold Ultimate Performance

- The performance of Renold Conveyor Chain is ensured by a programme of continuous testing and quality control of component dimensions, fits and material properties.
- Specially formulated lubricants reduce initial wear, provide corrosion protection and long storage life.
- Breaking loads exceed the minimum international standards.
- Correct chain selection is essential for optimum performance. Renold's experienced design team are always available to freely advise on particular products and applications.

Renold Ultimate Specification

The Renold specification has taken many years in design and development to achieve the optimum product. In order to ensure this is translated into product performance, we strictly control:

Materials	Heat Treatment	Processes	Fits	Attachment Assembly	Lubrication

Exact control of bush projection through the chain side plate maintains precise clearances between the chain's inner and outer links. This feature reduces the risk of wear during operation, allows space for lubricant penetration, and greatly reduces the possibility of chain seizure in dusty/abrasive environments.

Fatigue life is improved by maintaining precise fits and tolerances between the pins, bushes and side plates.

Bush and roller life are maximised by controlling the concentricity of these components and careful selection and control of the heat treatment process.

Chain and sprocket life are optimised by the rigid control of pitch accuracy, resulting in excellent gearing, lower friction, reduced wear and a reduction in noise levels during operation.

Down time in hostile environments is minimised by strict control of inner and outer plate clearances, ensuring effective lubricant penetration to the bearing surfaces.

Renold Ultimate Reliability

- The key to Renold Chain reliability is 'consistency' in design and manufacture.
- Maximum chain strength and resistance to wear are achieved by strict control of the material specification and by using state of the art heat treatment processes.
- Renold Chain is made to the highest quality standards. All our manufacturing and assembly processes are monitored by Statistical Process Control (SPC) in conformance with ISO 9000 (BS 5750) Quality Systems.
- The consistent overall tolerances of Renold Chain make it ideal for conveying systems requiring precise alignment on multi-strand chain layouts.

Conveyor Chain Details

Conveyor Chain Types

1

The precision conveyor chain, like transmission chain, consists of a series of journal bearings held in precise relationship to each other by constraining link plates.

Each bearing consists of a bearing pin and bush on which the chain roller revolves. The bearing pin and bush are case-hardened to allow articulation under high pressures, and to contend with the load carrying pressure and gearing action imparted via the chain rollers.

There is, for each strength of conveyor chain, a range of pitches; the minimum pitch being governed by the need for adequate wheel tooth strength; the maximum pitch being normally dictated by plate and general chain rigidity. When required, the normal maximum pitch can be exceeded by the use of strengthening bushes between the link plates, and suitable gaps to clear the bushes must be provided in the wheel teeth.

INTERNATIONAL STANDARDS

Conveyor chain, like transmission chain, can be manufactured to a number of different international standards. The main standards available are:

BRITISH STANDARD - BS

This standard covers chain manufactured to suit the British market and markets where a strong British presence has dominated engineering design and purchasing. The standard is based on the original Renold Conveyor Chain design.

ISO STANDARD

Chain manufactured to ISO Standard is not interchangeable with BS or DIN Standard Chain. This standard has a wide acceptance in the European market, except in Germany. Chain manufactured to this standard is becoming more popular and are used extensively in the Scandinavian region.

THE HOLLOW BEARING PIN CHAIN

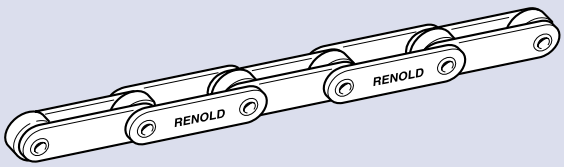

The hollow bearing pin type chain affords ready facility for fixing attachments to outer links by bolting through the hollow bearing pins and is suitable for use in all normal conditions.

The attachments may be bolted up tight or held in the hollow bearing pin in a “free” manner. Bolted attachments should only span the outer link, as a bolted attachment spanning the inner link would impair the free articulation of the chain.

THE DEEP LINK CHAIN

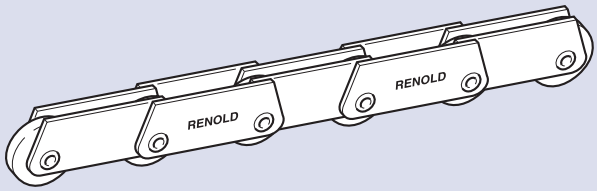

Deep link-type chains have sideplates with a greater depth than the normal chain plates; thus providing a continuous carrying edge above the roller periphery. When lateral flexing of the chain is required to negotiate horizontal bend radii, coned bearing pins are employed.

Available in Hollow or Solid Pin versions.

THE SOLID BEARING PIN CHAIN

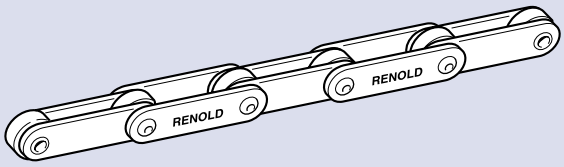

The solid bearing pin type chain, while having exactly the same gearing dimensions, i.e. pitch, inside width and roller diameter as the equivalent hollow bearing pin chain, is more robust and is recommended for use where arduous conditions may be encountered.

CHAIN ROLLERS

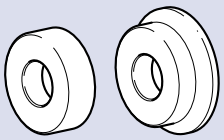

In general, the use of chain incorporating rollers is recommended, but bush chain, i.e. chain without rollers, can be used on certain applications.

Rollers of the plain or flanged type, with a choice of size and material, are listed for most chain series - size and material being dependent upon the type of application.

Standard Attachments

Standard attachments are parts fitted to a base chain to adapt it for a particular purpose as a conveying medium. Attachments may form an integral part of the link plate or may be built into the chain as a replacement of the normal link. Other attachments (according to type) are fixed to the chain plates by projection or fillet welding, to either one or both sides of the chain.

Standard attachments are described below:

- The letter stands for the attachment type.
- The figure stands for the number of holes within each attachment type.

Special attachments can be manufactured, but wherever possible, standard attachments used on our preferred range of chains shown earlier will give price and delivery advantages. Consult Renold Chain for details.

K Attachments
Outer or Inner Links

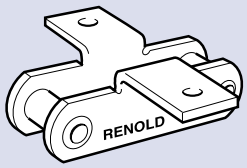

K1 - Integral

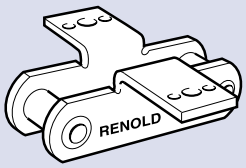

K3 - Integral

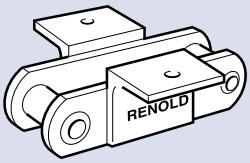

K1 - Welded

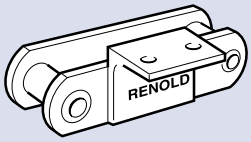

K2 - Welded

K Attachments provide a platform parallel to the chain line and bearing pin axis. They are used for securing slats, scrapers, buckets etc. to the chain.

F Attachments
Outer or Inner Links

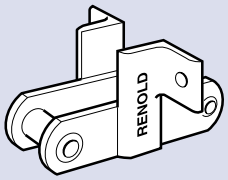

F1 - Welded

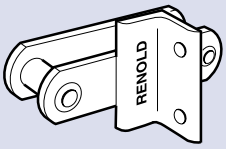

F2 - Welded

F Attachments provide a flat surface at right angles to the chain plate. They are used for securing pushers, scraper bars, etc.

L Attachments

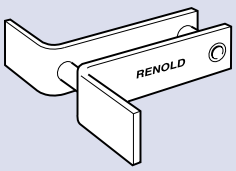

LO - Integral

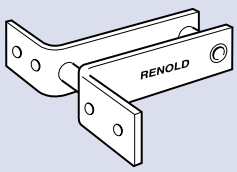

L2 - Integral

L Attachments are integral with the chain outer plates. Normally they have one or two holes (L2 preferred), but for use on scraper applications they can be supplied without holes and with various box widths (LO Type).

Standard Sprockets

A modified rim section is required when G or inverted F2 attachments are fitted to inner links. Strengthening ribs are incorporated where necessary. These sprockets can be modified only by facing, boring, keywaying and setscrewing.

Spigot Pins

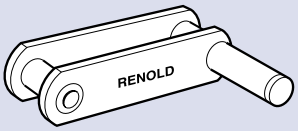

Spigot Pin through Hollow Bearing Pin

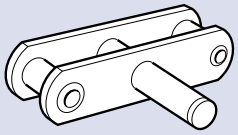

Spigot Pin through Link Plates

Spigot pins may be assembled either through hollow bearing pins or link plates and are secured by a nut and spring washer.

Extended Bearing Pins

Extended bearing pins, one side of the chain, can be supplied hard, soft, solid or drilled and are similar to the spigot pin arrangement.

Holed Link Plates

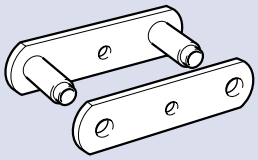

Single Holed Link Plate

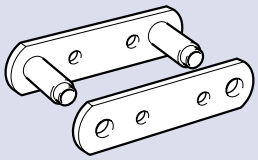

Double Holed Link Plate

Single holing is primarily for use with spigot pins and is required on both sides of the chain. Double holing is provided for the assembly of special attachments on one or both sides of the chain. The holes in the inner plates are countersunk on the inside face to prevent the bolt heads fouling the sprocket teeth.

Outboard Rollers
For use on Hollow Bearing Pin Chain

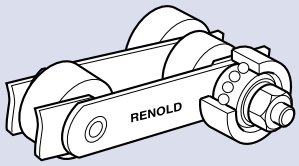

Outboard rollers have two principal advantages; as direct load carriers they enable the chain rollers to be used solely for gearing purposes and in the event of outboard roller wear, they can be replaced easily without recourse to chain replacement. They are particularly useful when attachments prevent the gearing rollers running on support tracks on the return run or where the roller loading is high.

FOR ATTACHMENT SIZES AND ATTACHMENTS OTHER THAN THOSE SHOWN, CONSULT RENOLD CHAIN.

Standard Conveyor Chain

BS 4116 Part 4

HOLLOW BEARING PINS — DEEP LINK

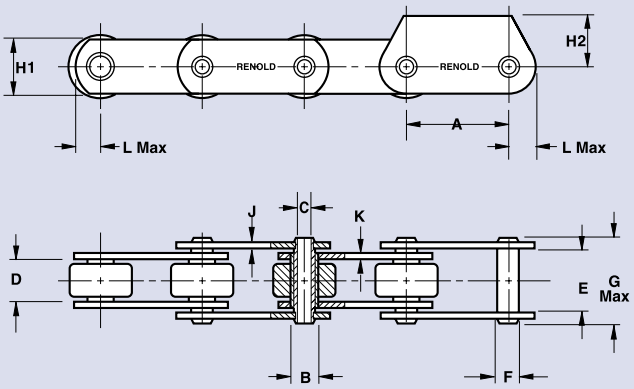

SOLID BEARING PINS — DEEP LINK

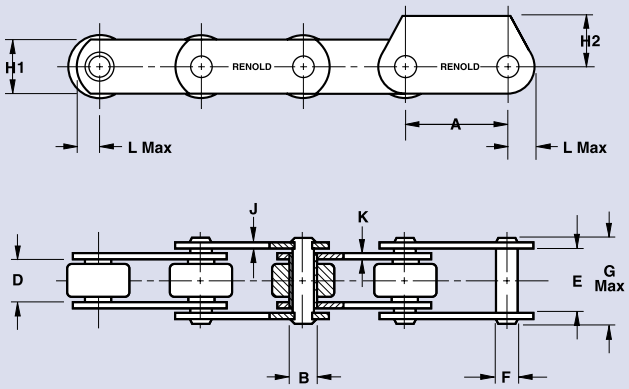

Hollow Bearing Pin

Chain Technical Details

Breaking Load (Min) lbf	Newtons	B.S Series Ref	Pitch Min Inch A	Max Inch A	Min mm A	Max mm A	Bush Dia Max B	Hollow Bearing Pin Bore Dia Min C	Inside Width Inner Min D	Width Outer Min E	Pin Dia Max F	Len Max G	Plate Height H1	Height H2	Width Outer J	Width Inner K	Head Max L
4500	20000	2H020	1.5	3.0	38.1	76.2	12.1	6.6	12.7	17.8	9.5	24.6	19.1	-	1.8	2.3	11.4
6000	27000	3H027	1.5	6.0	38.1	152.4	18.0	10.1	15.0	25.4	14.0	36.5	25.4	26.0	3.8	3.8	15.0
12000	54000	4H054	2.0	9.0	50.8	228.6	23.6	13.2	19.0	32.5	19.0	44.0	38.1	32.0	3.8	5.1	22.1
24000	107000	5H107	3.5	12.0	88.9	304.8	33.2	20.1	25.4	43.0	26.9	57.0	51.0	45.0	5.1	7.1	29.7
36000	160000	6H160	5.0	18.0	127.0	457.2	38.1	23.1	38.1	59.0	31.8	79.5	61.0	-	7.6	8.9	34.8

Solid Bearing Pin

Chain Technical Details

Breaking Load (Min) lbf	Newtons	B.S Series Ref	Pitch Min Inch A	Max Inch A	Min mm A	Max mm A	Bush Dia Max B	Hollow Bearing Pin Bore Dia Min C	Inside Width Inner Min D	Width Outer Min E	Pin Dia Max F	Len Max G	Plate Height H1	Height H2	Width Outer J	Width Inner K	Head Max L
3000	13000	1S013	1.0	4.5	25.4	114.3	8.6	-	11.7	16.0	5.7	21.8	18.0	16.0	1.8	1.8	11.4
7500	33000	3S033	1.5	6.0	38.1	152.4	18.0	-	15.0	25.4	14.0	38.0	25.4	26.0	3.8	3.8	15.0
15000	67000	4S067	2.0	9.0	50.8	228.6	23.6	-	19.0	32.5	19.0	46.0	38.1	32.0	3.8	5.1	22.1
30000	134000	5S134	3.5	12.0	88.9	304.8	33.2	-	25.4	43.0	26.9	60.0	51.0	45.0	5.1	7.1	29.7
45000	200000	6S200	5.0	18.0	127.0	457.2	38.1	-	38.1	59.0	31.8	82.0	61.0	-	7.6	8.9	34.8
60000	267000	7S267	6.0	18.0	152.4	457.2	38.1	-	38.1	59.0	23.0	80.0	61.0	-	7.6	8.9	34.8
90000	400000	8S400	6.0	24.0	152.4	609.6	38.1	-	38.1	66.3	29.4	94.0	63.5	-	10.0	13.0	35.8

THE DIMENSIONS LISTED WILL NOT VARY WITH PITCH SIZE FOR EACH GIVEN BREAKING LOAD.
FOR THE DETAILS OF INDIVIDUAL PITCH SIZES, ROLLERS, AND SPARE LINKS, SEE PAGES 9 AND 10.
FOR ATTACHMENTS SEE PAGES 14 - 22.

Standard and Deep Link Chain

BS4116 Part 4

Pitch Inch	mm	Roller Chain No Standard	Mass kg/m	Roller Chain No Deep link	Mass kg/m
3000 lbf, 13000 Newtons Breaking Load - Solid Pin					
1.0	25.4	140048/12	1.33	167048/12	1.62
1.5	38.1	140068/56	1.77	167068/56	2.03
2.0	50.8	140088/56	1.46	167088/56	1.70
2.5	63.5	140108/56	1.28	167108/56	1.52
3.0	76.2	140128/56	1.15	167128/56	1.37
3.5	88.9	140148/56	1.06	167148/56	1.28
4.0	101.6	140168/56	1.00	167168/56	1.22
4.5	114.3	140188/56	0.95	167188/56	1.18
4500 lbf, 20000 Newtons Breaking Load - Hollow Pin					
1.5	38.1	198028**	2.00		
2.0	50.8	198030**	1.65	NOT	
2.5	63.5	198033**	1.46	AVAILABLE	
3.0	76.2	198039**	1.34		
6000 lbf, 27000 Newtons Breaking Load - Hollow Pin					
1.5	38.1	105060/03*	2.94	107060/03	4.02
2.0	50.8	105080/16**	3.50	107080/16	4.52
2.5	63.5	105100/16	3.13	107100/16	4.10
3.0	76.2	105120/16**	2.88	107120/16	3.83
3.5	88.9	105140/16	2.71	107140/16	3.63
4.0	101.6	105160/16**	2.58	107160/16	3.49
4.5	114.3	105180/16	2.47	107180/16	3.36
5.0	127.0	105200/16	2.39	107200/16	3.27
6.0	152.4	105240/16**	2.27	107240/16	3.14
7500 lbf, 33000 Newtons Breaking Load - Solid Pin					
1.5	38.1	145060/03*	3.54	167060/03	4.62
2.0	50.8	145080/16**	3.95	167080/16	4.97
2.5	63.5	145100/16	3.49	167100/16	4.46
3.0	76.2	145120/16**	3.19	167120/16	4.14
3.5	88.9	145140/16	2.97	167140/16	3.89
4.0	101.6	145160/16**	2.80	167160/16	3.71
4.5	114.3	145180/16	2.67	167180/16	3.56
5.0	127.0	145200/16	2.57	167200/16	3.45
6.0	152.4	145240/16*	2.42	167240/16	3.29
12000 lbf, 54000 Newtons Breaking Load - Hollow Pin					
2.0	50.8	10508/03*	5.23	107081/03	6.25
3.0	76.2	105121/16**	6.93	107121/16	7.90
3.5	88.9	105141/16	6.35	107141/16	7.30
4.0	101.6	105161/16**	5.91	107161/16	6.85
4.5	114.3	105181/16	5.57	107181/16	6.50
5.0	127.0	105201/16	5.30	107201/16	6.22
6.0	152.4	105241/16**	4.89	107241/16	5.80
7.0	177.8	105281/16	4.60	107281/16	5.50
8.0	203.2	105321/16	4.39	107321/16	5.28
9.0	228.6	105361/16	4.21	107361/16	5.10
15000 lbf, 67000 Newtons Breaking Load - Solid Pin					
2.0	50.8	145081/03*	6.28	167081/03	7.31
3.0	76.2	145121/16**	7.62	167121/16	8.59
3.5	88.9	145141/16	6.95	167141/16	7.90
4.0	101.6	145161/16**	6.43	167161/16	7.37
4.5	114.3	145181/16	6.03	167181/16	6.96
5.0	127.0	145201/16	5.72	167201/16	6.64
6.0	152.4	145241/16**	5.24	167241/16	6.15
7.0	177.8	145281/16	4.90	167271/16	5.80
8.0	203.2	145321/16	4.65	167321/16	5.54
9.0	228.6	145361/16	4.44	167361/16	5.33

* BUSH CHAIN ONLY

** PREFERRED SIZES OF CHAIN, WITH STANDARD SPROCKETS AND ATTACHMENTS AVAILABLE.

Pitch Inch	mm	Roller Chain No Standard	Mass kg/m	Roller Chain No Deep link	Mass kg/m
24000 lbf, 107000 Newtons Breaking Load - Hollow Pin					
4.0	101.6	105162/12**	12.74	107162/12	14.86
5.0	127.0	105202/12	11.21	107202/12	13.26
6.0	152.4	105242/12**	10.91	107242/12	12.91
7.0	177.8	105282/12	9.46	107282/12	11.42
8.0	203.2	105322/12	8.92	107322/12	10.86
9.0	228.6	105362/12	8.50	107362/12	10.42
12.0	304.8	105482/12	7.65	107482/12	9.52
30000 lbf, 134000 Newtons Breaking Load - Solid Pin					
4.0	101.6	145162/12**	14.22	167162/12	16.34
5.0	127.0	145202/12	12.40	167202/12	14.45
6.0	152.4	145242/12**	11.18	167242/12	13.18
7.0	177.8	145282/12	10.31	167282/12	12.27
8.0	203.2	145322/12	9.66	167322/12	11.60
9.0	228.6	145362/12	9.16	167362/12	11.08
12.0	304.8	145482/12	8.14	167482/12	10.01
36000 lbf, 160000 Newtons Breaking Load - Hollow Pin					
5.0	127.0	105203/12	24.97		
6.0	152.4	105243/12	22.18		
7.0	177.8	105283/12	20.18		
7.5	190.5	105303/12	19.40	AVAILABLE	
8.0	203.2	105323/12	18.68	ON	
9.0	228.6	105363/12	17.52	REQUEST	
12.0	304.8	105483/12	15.19		
15.0	381.0	105603/12	13.79		
18.0	457.2	105723/12	12.86		
45000 lbf, 200000 Newtons Breaking Load - Solid Pin					
5.0	127.0	145203/12	27.34		
6.0	152.4	145243/12	24.15		
7.0	177.8	145283/12	21.87		
7.5	190.5	145303/12	20.98	AVAILABLE	
8.0	203.2	145323/12	20.15	ON	
9.0	228.6	145363/12	18.83	REQUEST	
12.0	304.8	145483/12	16.17		
15.0	381.0	145603/12	14.58		
18.0	457.2	145723/12	13.52		
60000 lbf, 267000 Newtons Breaking Load - Solid Pin					
6.0	152.4	145245/12	23.38		
7.0	177.8	145285/12	21.64		
8.0	203.2	145325/12	19.96	AVAILABLE	
9.0	228.6	145365/12	18.66	ON	
12.0	304.8	145485/12	16.04	REQUEST	
15.0	381.0	145605/12	14.47		
18.0	457.2	145725/12	13.43		
90000 lbf, 400000 Newtons Breaking Load - Solid Pin					
6.0	152.4	145247/12	29.09		
9.0	228.6	145367/12	23.36		
12.0	304.8	145487/12	20.50	AVAILABLE	
15.0	381.0	145607/12	18.78	ON	
18.0	457.2	145727/12	17.63	REQUEST	
24.0	609.6	145967/12	16.19		

THIS TABLE INDICATES STANDARD ROLLER CHAIN CONFIGURATIONS. WHERE ALTERNATIVE ROLLERS ARE REQUIRED, AMEND THE ROLLER SUFFIX FOR IDENTIFICATION PURPOSES WHEN ORDERING - SEE PAGE 10.
FOR ROLLER SELECTION PROCEDURE - SEE PAGE 75.

Conveyor Chain

Rollers and Connecting Links

ROLLERS

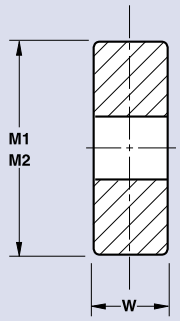

PLAIN ROLLER

/12 & /16 STANDARD ROLLERS
(/12 Case Hardened Steel, /16 Sintered Hardened)

/52 & /56 LARGE ROLLERS
(/52 Case Hardened Steel, /56 Sintered Hardened)

/41/42 FLUSH GEARING ROLLERS
(available on request).

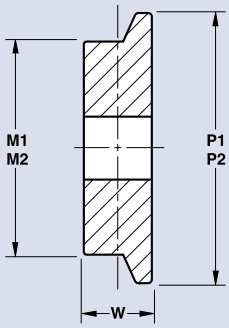

FLANGED ROLLER

/21 STANDARD FLANGED ROLLERS
(Mild Steel)

/22 STANDARD FLANGED ROLLERS
(Case Hardened Steel)

/62 LARGE FLANGED ROLLERS
(Case Hardened Steel)

Chain				Technical Details											
STANDARD ROLLER Breaking Load Rollers				STANDARD PLAIN					STANDARD FLANGED						
Hollow Pin		Solid Pin		Min Pitch		Tread	Roller	Rollers	Min Pitch			Tread	Flange	Roller	
lbf	Newtons	lbf	Newtons	Inch	mm	Dia M1	Width W	Available	Inch	mm	Dia M1	Dia P1	Width W	Available	
-	-	3000	13000	1.0	25.4	12.1	11.4	/12	-	-	-	-	-	-	
6000	27000	7500	33000	2.0	50.8	31.8	14.0	/16	2.5	63.5	31.8	41.3	14.0	/21	/22
12000	54000	15000	67000	3.0	76.2	47.6	17.8	/16	3.5	88.9	47.6	60.3	17.8	/21	/22
24000	107000	30000	134000	4.0	101.6	66.7	24.0	/12	4.5	114.3	66.7	85.7	24.0	/21	/22
36000	160000	45000	200000	5.0	127.0	88.9	36.8	/12	6.0	152.4	88.9	114.3	36.8	/22	
-	-	60000	267000	5.0	127.0	88.9	36.8	/12	6.0	152.4	88.9	114.3	36.8	/22	
-	-	90000	400000	6.0	152.4	88.9	36.8	/12	6.5	165.1	88.9	114.3	36.8	/22	
LARGE ROLLER				PLAIN					FLANGED						
						M2	W				M2	P2	W		
-	-	3000	13000	1.5	38.1	25.4	11.4	/56	-	-	-	-	-	-	
4500	20000	-	-	1.5	38.1	25.4	11.4	-	-	-	-	-	-	-	
36000	160000	45000	200000	8.0	203.2	127.0	36.8	/52	9.0	228.6	127.0	152.4	36.8	/62	
-	-	60000	267000	8.0	203.2	127.0	36.8	/52	9.0	228.6	127.0	152.4	36.8	/62	
-	-	90000	400000	8.0	203.2	127.0	36.8	/52	9.0	228.6	127.0	152.4	36.8	/62	

ROLLER SELECTION DETAILS - SEE PAGE 75.

CONNECTING LINKS

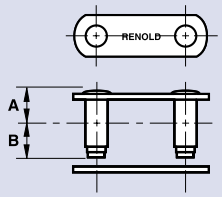

No 107
RIVETING LINK ONE SIDE

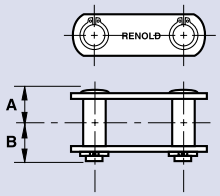

No 58
SOFT CIRCLIP LINK

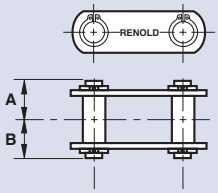

No 11
SPRING CLIP LINK BOTH SIDES

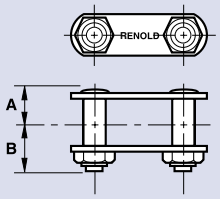

No 69
LINK WITH SELF LOCKING NUTS

Breaking Load						No 107		No 58 Chain Centre to			No 11 Chain Centre to		No 69 Chain Centre to
Hollow Pin	Solid Pin			Hollow Pin	Solid Pin		Plain	Fastener	Fastener	Fastener		Plain	Fastener
lbf	Newtons	lbf	Newtons	A&B	Both A&B	Both	A	Side B	Side A	Side B	Side	A	Side B	Side
-	-	3000	13000	-	11.0		11.0	13.0	-	-		11.0	17.0	
4500	20000	-	-	12.3	-		-	-	13.8	13.8		-	-	
6000	27000	7500	33000	18.3	19.0		19.0	22.0	-	-		19.0	30.0	
12000	54000	15000	67000	22.0	23.0		23.0	25.0	-	-		23.0	36.0	
24000	107000	30000	134000	28.5	30.0		-	-	-	-		30.0	46.0	
36000	160000	45000	200000	39.8	41.0		-	-	-	-		41.0	62.0	
-	-	60000	267000	-	40.0		-	-	-	-		40.0	56.0	
-	-	90000	400000	-	47.0		-	-	-	-		47.0	68.0	

DIMENSIONS 'A' & 'B' ARE MAXIMUM SIZES.

Extra Strength Standard Conveyor Chain

BS 4116 Part 4

Product Description

To complement our standard range of British Standard Conveyor Chain, this extra strength chain is more suitable for conveyor applications selected on ultimate tensile strength (breaking load). Each chain is the same dimensionally as its normal counterpart, for example an extra strength 24000 lbs chain has basically the same dimensions as a normal 12000 lbs series chain.

This chain is used extensively in the conveying of animal feed and bulk food stuffs such as grain, maize, wheat and raw food mixtures. Most of these applications use scraper type conveyor systems that normally have long centre distances between sprockets. Such systems are sometimes slow moving with little or no shock loading.

Contact our technical sales staff for selection and applicational details.

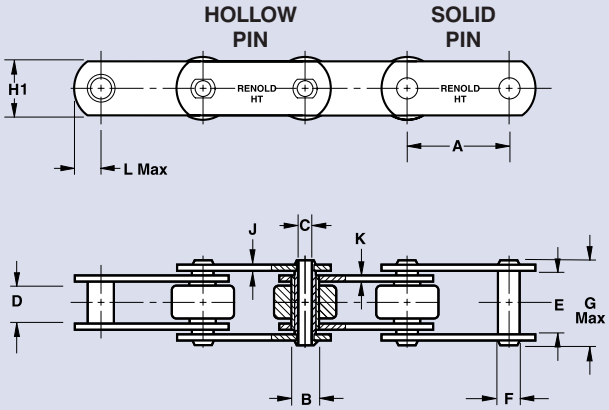

Hollow Bearing Pin - Extra Strength

Chain Technical Details

Breaking Load (Min) lbf	Newtons	Pitch Min Inch A	Pitch Max Inch A	Pitch Min mm A	Pitch Max mm A	Bush Dia Max B	Hollow Bearing Pin Bore Dia Min C	Inside Width Inner Min D	Inside Width Outer Min E	Pin Dia Max F	Pin Len Max G	Plate Height H1	Plate Width Outer J	Plate Width Inner K	Plate Head Max L
12000	54000	1.5	6.0	38.1	152.4	18.0	10.1	15.0	25.4	14.0	36.5	25.4	3.8	4.0	15.0
24000	107000	2.0	9.0	50.8	228.6	23.6	13.2	19.0	32.5	19.0	44.0	38.1	3.8	5.1	22.1
48000	213500	3.5	12.0	88.9	304.8	33.2	20.1	25.4	43.0	26.9	57.0	51.0	5.1	7.1	29.7

Solid Bearing Pin - Extra Strength

Chain Technical Details

Breaking Load (Min) lbf	Newtons	Pitch Min Inch A	Pitch Max Inch A	Pitch Min mm A	Pitch Max mm A	Bush Dia Max B	Hollow Bearing Pin Bore Dia Min C	Inside Width Inner Min D	Inside Width Outer Min E	Pin Dia Max F	Pin Len Max G	Plate Height H1	Plate Width Outer J	Plate Width Inner K	Plate Head Max L
15000	67000	1.5	6.0	38.1	152.4	18.0	-	15.0	25.4	14.0	38.0	25.4	3.8	4.0	15.0
30000	134000	2.0	9.0	50.8	228.6	23.6	-	19.0	32.5	19.0	46.0	38.1	3.8	5.1	22.1
60000	267000	3.5	12.0	88.9	304.8	33.2	-	25.4	43.0	26.9	60.0	51.0	5.1	7.1	29.7

THE DIMENSIONS LISTED WILL NOT VARY WITH PITCH SIZE FOR EACH GIVEN BREAKING LOAD.
FOR THE DETAILS OF INDIVIDUAL PITCH SIZES, ROLLERS, AND SPARE LINKS, SEE PAGES 12 AND 13.
EXTRA STRENGTH CHAINS ARE BASED ON THE STANDARD CHAIN SHOWN ON PAGE 8.
FOR ATTACHMENTS SEE PAGES 14 - 22.

Extra Strength Conveyor Chain

Standard Range - B.S.

Pitch Inch	mm	Roller Chain No Extra Strength	Mass kg/m
12000 lbf, 54000 Newtons Breaking Load - Hollow Pin (Extra strength version of 6000 lbf series)			
1.5	38.1	102060/03*	2.94
2.0	50.8	102080/16**	3.50
2.5	63.5	102100/16	3.13
3.0	76.2	102120/16**	2.88
3.5	88.9	102140/16	2.71
4.0	101.6	102160/16**	2.58
4.5	114.3	102180/16	2.47
5.0	127.0	102200/16	2.39
6.0	152.4	102240/16**	2.27
15000 lbf, 67000 Newtons Breaking Load - Solid Pin (Extra strength version of 7500 lbf series)			
1.5	38.1	162060/03	3.54
2.0	50.8	162080/16**	3.95
2.5	63.5	162100/16	3.49
3.0	76.2	162120/16**	3.19
3.5	88.9	162140/16	2.97
4.0	101.6	162160/16**	2.80
4.5	114.3	162180/16	2.67
5.0	127.0	162200/16	2.57
6.0	152.4	162240/16**	2.42
24000 lbf, 107000 Newtons Breaking Load - Hollow Pin (Extra strength version of 12000 lbf series)			
2.0	50.8	102081/03	5.23
3.0	76.2	102121/16**	6.93
3.5	88.9	102141/16	6.35
4.0	101.6	102161/16**	5.91
4.5	114.3	102181/16	5.57
5.0	127.0	102201/16	5.30
6.0	152.4	102241/16**	4.89
7.0	177.8	102281/16	4.60
8.0	203.2	102321/16	4.39
9.0	228.6	102361/16	4.21
30000 lbf, 134000 Newtons Breaking Load - Solid Pin (Extra strength version of 15000 lbf series)			
2.0	50.8	162081/03	6.28
3.0	76.2	162121/16**	7.62
3.5	88.9	162141/16	6.95
4.0	101.6	162161/16**	6.43
4.5	114.3	162181/16	6.03
5.0	127.0	162201/16	5.72
6.0	152.4	162241/16**	5.24
7.0	177.8	162281/16	4.90
8.0	203.2	162321/16	4.65
9.0	228.6	162361/16	4.44

* BUSH CHAIN ONLY.
** PREFERRED SIZES OF CHAIN, WITH STANDARD SPROCKETS AND ATTACHMENTS AVAILABLE.

Pitch Inch	mm	Roller Chain No Extra Strength	Mass kg/m
48000 lbf, 2135000 Newtons Breaking Load - Hollow Pin (Extra strength version of 24000 lbf series)			
3.5	88.9	102142/03	8.20
4.0	101.6	102162/12**	12.74
5.0	127.0	102202/12	11.21
6.0	152.4	102242/12**	10.91
7.0	177.8	102282/12	9.46
8.0	203.2	102322/12	8.92
9.0	228.6	102362/12	8.50
12.0	304.8	102482/12	7.65
60000 lbf, 267000 Newtons Breaking Load - Solid Pin (Extra strength version of 30000 lbf series)			
3.5	88.9	162142/12	9.90
4.0	101.6	162162/12**	14.22
5.0	127.0	162202/12	12.40
6.0	152.4	162242/12**	11.18
7.0	177.8	162282/12	10.31
8.0	203.2	162322/12	9.66
9.0	228.6	162362/12	9.16
12.0	204.8	162482/12	8.14

THIS TABLE INDICATES STANDARD ROLLER CHAIN CONFIGURATIONS. WHERE ALTERNATIVE ROLLERS ARE REQUIRED, AMEND THE ROLLER SUFFIX FOR IDENTIFICATION PURPOSES WHEN ORDERING - SEE PAGE 13.
FOR ROLLER SELECTION PROCEDURE SEE PAGE 73.

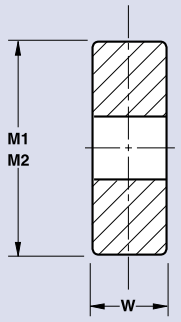

/12 & /16 STANDARD ROLLERS
(/12 Case Hardened Steel,
/16 Hardened Sintered

/41 & /42 FLUSH GEARING ROLLERS
(/41 Mild Steel, /42 Case Hardened Steel)

PLAIN ROLLER

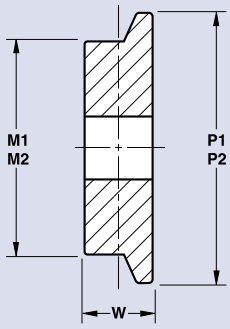

/21 STANDARD ROLLERS
(Mild Steel)

/22 STANDARD ROLLERS
(Case Hardened Steel)

FLANGED ROLLER

Chain — Technical Details

STANDARD ROLLER Breaking Load (Min) Rollers Hollow Pin lbf	Hollow Pin Newtons	Solid Pin lbf	Solid Pin Newtons	STANDARD PLAIN Min Pitch Inch	Min Pitch mm	Tread Dia M1	Roller Width W	Rollers Available	STANDARD FLANGED Min Pitch Inch	Min Pitch mm	Tread Dia M1	Flange Dia P1	Roller Width W	Roller Available
12000	54000	15000	67000	2.0	50.8	31.8	14.0	/16	2.5	63.5	31.8	41.3	14.0	/21 /22
24000	107000	30000	84000	3.0	76.2	47.6	17.8	/16	3.5	88.9	47.6	60.3	17.8	/21 /22
48000	213500	60000	200000	4.0	101.6	66.7	24.0	/12	4.5	114.3	66.7	85.7	24.0	/21 /22

ROLLER SELECTION DETAILS - SEE PAGE 75.

CONNECTING LINKS

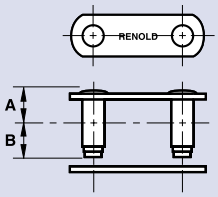

No 107
RIVETING LINK ONE SIDE

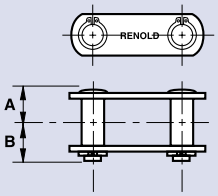

No 58
SOFT CIRCLIP LINK

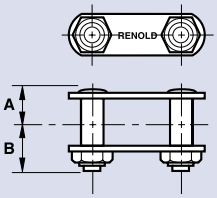

No 69
LINK WITH NUTS

Breaking Load (Min) Hollow Pin lbf	Solid Pin Newtons	Pin lbf	Pin Newtons A&B	Hollow Pin Both A&B	No 107 Solid Both	No 107 Plain A	No 58 Chain Centre to Fastener Side B	No 58 Chain Centre to Side	No 58 Chain Centre to Plain A	No 58 Chain Centre to Fastener Side B	No 69 Chain Centre to Side	No 69 Chain Centre to
12000	54000	15000	67000		18.3	19.0		19.0	22.0		19.0	30.0
24000	107000	30000	134000		22.0	23.0		23.0	25.0		23.0	36.0
48000	213500	60000	267000		28.5	30.0		-	-		30.0	46.0

DIMENSIONS 'A' & 'B' ARE MAXIMUM SIZES.
FOR STANDARD VERSIONS OF THESE CHAINS SEE PAGE 8.
SMALL ROLLERS - AVAILABLE ON REQUEST

Conveyor Chain

BS K Attachments (Integral)

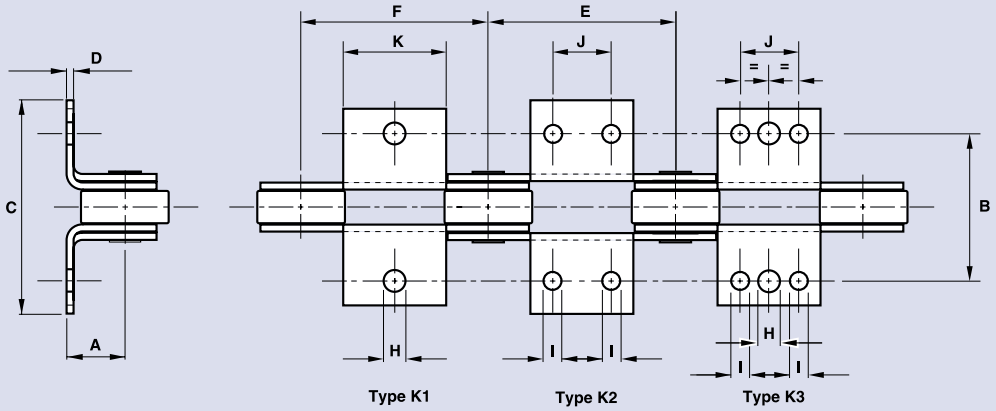

Chain Technical Details

Breaking Load lbf	Platform Height A	Transverse Pitch B	Width Over Attachment Inner/Outer C	Attachment Thickness Inner/Outer D	Attachment Type	Chain Pitch Outer E	Chain Pitch Inner F	Centre Hole Dia H	Outer Holes Dia I	Attachment Hole Pitch J	Platform Length K	Mass (kg/Att)
3000	16.5	44.5	66 / 70	1.8 / 1.8	K1	38.1	38.1	9.2	-	-	19.0	0.009
					K3	50.8	50.8	9.2	7.4	25.4	44.5	0.018
					K3	76.2	76.2	9.2	7.4	25.4	44.5	0.018
					K3	101.6	101.6	9.2	7.4	25.4	70.0	0.027
6000 /7500	19.0	76.2	106 / 115	3.8 / 3.8	K3	76.2	76.2	10.5	9.2	22.2	43.0	0.045
					K3	101.6	101.6	10.5	9.2	31.8	63.5	0.077
					K3	127.0	127.0	10.5	9.2	57.2	89.0	0.109
					K3	152.4	152.4	10.5	9.2	57.2	114.5	0.141
12000/15000	31.8	89.0	130 / 136	5.1 / 3.8	K3	76.2	76.2	13.7	10.5	31.8	63.5	0.127
					K3	101.6	101.6	13.7	10.5	31.8	63.5	0.127
					K3	152.4	152.4	13.7	10.5	57.2	114.5	0.24
24000/30000	38.0	108.0	146 / 157	7.1 / 5.1	K1	101.6	101.6	15.3	-	-	56.0	0.172
					K2	101.6	101.6	-	12.2	31.8	56.0	0.172
					K3	152.4	152.4	15.3	12.2	57.2	107.0	0.318
36000/45000	50.8	146.0	198 / 198	8.9 / 7.6	K2	152.4	152.4	-	13.7	31.8	74.0	0.31
					K2	203.2	203.2	-	13.7	88.9	125.0	0.42

BS K Attachments (Welded)

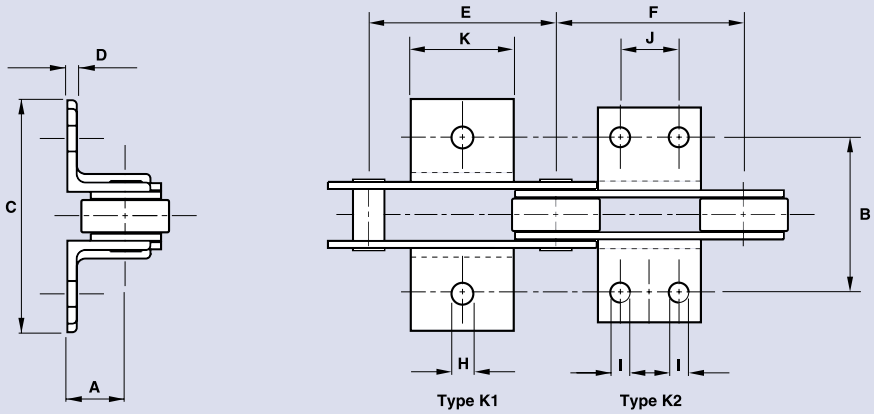

Chain Technical Details

Breaking Load lbf	Platform Height A	Transverse Pitch B	Width Over Attachment Inner/Outer C (Max)	Attachment Thickness D	Attachment Type	Attachment Minimum Outer Pitch E	Attachment Minimum Inner Pitch F	Centre Hole Dia H	Outer Holes Dia I	Attachment Hole Pitch J	Platform Length K	Mass (kg/Att)
3000	16.5	44.5	68 / 72	3.0	K1	38.1	50.8	8.2	-	-	19.0	0.027
					K1	50.8	63.5	8.2	-	-	38.0	0.059
					K2	50.8	63.5	-	7.4	22.2	38.0	0.059
					K2	76.2	76.2	-	7.4	25.4	44.5	0.068
6000 / 7500	19.0	76.2	106 / 116	4.0	K1	50.8	63.5	10.6	-	-	19.0	0.028
					K1	63.5	76.2	10.6	-	-	28.0	0.054
					K1	88.9	101.6	10.6	-	-	56.0	0.104
					K2	88.9	101.6	-	9.2	31.8	56.0	0.104
					K2	114.3	127.0	-	9.2	57.2	84.0	0.163
12000 / 15000	31.8	88.9	122 / 133	5.0	K1	76.2	88.9	13.7	-	-	35.0	0.119
					K1	88.9	101.6	13.7	-	-	56.0	0.193
					K2	88.9	101.6	-	10.5	31.8	56.0	0.193
					K2	114.3	152.4	-	10.5	57.2	84.0	0.289
					K2	152.4	177.8	-	10.5	88.9	127.0	0.443
24000 / 30000	38.0	108.0	146 / 159	6.0	K1	127.0	127.0	15.3	-	-	56.0	0.299
					K2	127.0	127.0	-	12.2	31.8	56.0	0.299
					K2	152.4	152.4	-	12.2	57.2	84.0	0.449
					K2	177.8	177.8	-	12.2	69.9	108.0	0.581
					K2	203.2	203.2	-	12.2	88.9	127.0	0.685
					K2	228.6	228.6	-	12.2	133.4	168.0	0.907
36000 / 45000 / 60000	50.8	146.0	202 / 200	8.0	K1	152.4	152.4	16.9	-	-	70.0	0.581
					K2	152.4	152.4	-	13.7	38.1	70.0	0.581
					K2	203.2	203.2	-	13.7	76.2	112.0	0.930
					K2	228.6	228.6	-	13.7	88.9	152.0	1.27
					K2	304.8	304.8	-	13.7	165.1	229.0	1.905
90000	57.0	171.5	229 / 252	10.0	K1	228.6	228.6	19.7	-	-	89.0	1.05
					K2	228.6	228.6	-	19.7	44.5	89.0	1.05
					K2	228.6	228.6	-	19.7	88.9	152.0	1.81
					K2	304.8	304.8	-	19.7	165.1	229.0	2.71

Conveyor Chain

BS F1 Attachments (Welded)

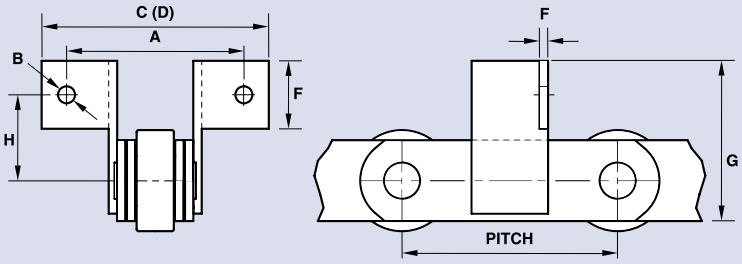

Chain	Technical Details			F1 Attachments							
Breaking Load lbf	Minimum Pitch Inner Plate	Minimum Pitch Outer Plate	Transverse Pitch A	Attachment Hole Size B	Width Over Attachment Outer Plate C (Max)	Width Over Attachment Inner Plate D (Max)	Attachment Thickness E	Attachment Face Height F	Total Height of Attachment G	Attachment Hole Distance From Chain Centreline H	Mass (kg)
3000	50.8	38.1	44.5	7.4	72.0	68.0	3.0	19.0	44.5	26.0	0.054
6000 / 7500	69.9	57.2	76.2	9.2	116.0	106.0	4.0	25.4	56.0	32.4	0.082
12000 / 15000	101.6	82.6	88.9	10.5	133.0	122.0	5.0	31.8	84.0	51.4	0.163
24000 / 30000	139.7	114.3	108.0	12.2	159.0	146.0	6.0	44.5	108.0	63.5	0.435
36000 / 45000	165.1	133.4	146.0	13.7	200.0	202.0	8.0	63.5	152.0	90.0	0.954
60000	165.1	133.4	146.0	13.7	200.0	202.0	8.0	63.5	152.0	90.0	0.950
90000	190.5	152.4	171.5	19.7	252.0	229.0	10.0	63.5	152.0	88.9	1.530

BS F2 Attachments (Welded)

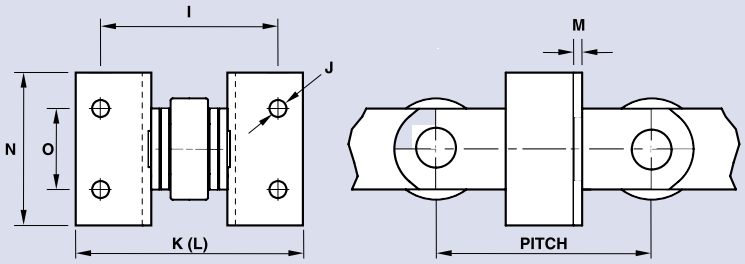

Chain	Technical Details			F2 Attachments						
Breaking Load lbf	**Minimum Pitch Inner Plate**	**Minimum Pitch Outer Plate**	**Transverse Pitch I**	**Attachment Hole Size J**	**Width Over Attachment Outer Plate K (Max)**	**Width Over Attachment Inner Plate L (Max)**	**Attachment Thickness M**	**Attachment Face Height N**	**Pitch of Attachment Holes O**	**Mass (kg)**
3000	50.8	38.1	44.5	7.4	72.0	68.0	3.0	44.5	25.4	0.068
6000 / 7500	69.9	57.2	76.2	9.2	116.0	106.0	4.0	56.0	31.8	0.104
12000 / 15000	101.6	82.6	88.9	10.5	133.0	122.0	5.0	84.0	57.2	0.231
24000 / 30000	139.7	114.3	108.0	12.2	159.0	146.0	6.0	108.0	69.9	0.580
36000 / 45000	165.1	133.4	146.0	13.7	200.0	202.0	8.0	152.0	88.9	1.270
60000	165.1	133.4	146.0	13.7	200.0	202.0	8.0	152.0	88.9	1.270
90000	190.5	152.4	171.5	19.7	252.0	229.0	10.0	152.0	88.9	1.810

Conveyor Chain

BS L Attachments (Integral)

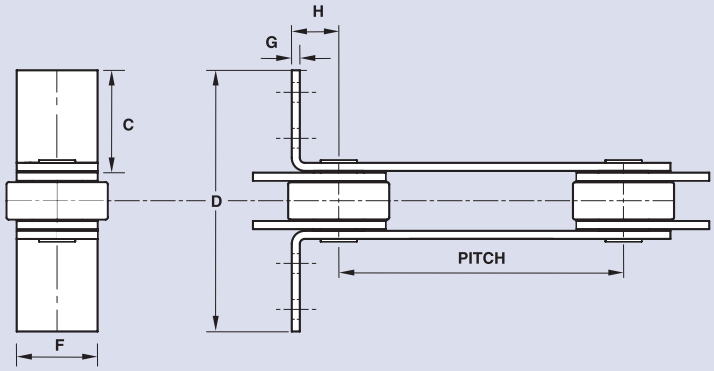

Chain Technical Details

Breaking Load lbf	Type	Transverse Pitch A	Pitch of Attachment Holes B	Attachment Face Length C	Width Over Attachment Outer D	Attachment Hole Diameter E	Total Height of Attachment F	Attachment Thickness G	Distance of Pitch point to Attachment Face H	Box Width*	Mass (kg)
3000	L0	-	-	28.7	74.2	-	18.0	1.8	16.0	76.2	0.007
	L0	-	-	41.4	99.6	-	18.0	1.8	16.0	101.6	0.010
	L0	-	-	54.1	125.0	-	18.0	1.8	16.0	127.0	0.013
	L0	-	-	66.8	150.4	-	18.0	1.8	16.0	152.4	0.016
	L1	41.4	-	25.4	67.6	7.4	18.0	1.8	16.0	-	0.007
	L2	41.4	19.0	41.4	100.0	7.4	18.0	1.8	16.0	-	0.009
6000 / 7500	L0	-	-	48.3	123.5	-	25.4	3.8	19.0	127.0	0.041
	L0	-	-	61.0	148.9	-	25.4	3.8	19.0	152.4	0.051
	L0	-	-	86.4	199.7	-	25.4	3.8	19.0	203.2	0.071
	L0	-	-	111.8	250.5	-	25.4	3.8	19.0	254.0	0.091
	L0	-	-	137.2	301.3	-	25.4	3.8	19.0	304.8	0.111
	L1	58.9	-	31.8	107.0	9.2	25.4	3.8	19.0	-	0.025
	L2	58.9	21.6	48.3	123.0	9.2	25.4	3.8	19.0	-	0.041
12000 / 15000	L0	-	-	44.5	122.0	-	38.1	3.8	25.4	127.0	0.058
	L0	-	-	57.2	147.4	-	38.1	3.8	25.4	152.4	0.072
	L0	-	-	82.6	198.2	-	38.1	3.8	25.4	203.2	0.101
	L0	-	-	108.0	249.0	-	38.1	3.8	25.4	254.0	0.130
	L0	-	-	133.4	299.8	-	38.1	3.8	25.4	304.8	0.160
	L1	73.4	-	36.8	106.8	10.5	38.1	3.8	25.4	-	0.045
	L2	73.4	24.0	57.2	148.6	10.5	38.1	3.8	25.4	-	0.073
24000 / 30000	L0	-	-	128.5	300.0	-	51.0	5.1	35.0	320.0	0.267
36000 / 45000	L0	-	-	135.2	330.0	-	61.0	7.6	42.0	350.0	0.479
60000	L0	-	-	135.2	330.0	-	61.0	7.6	42.0	350.0	0.479

* ALTERNATIVE WIDTH AVAILABLE. PLEASE ENQUIRE.

BS Attachments Holes in Link Plates

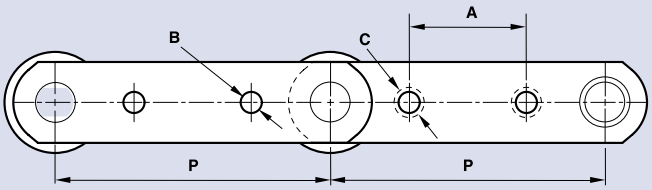

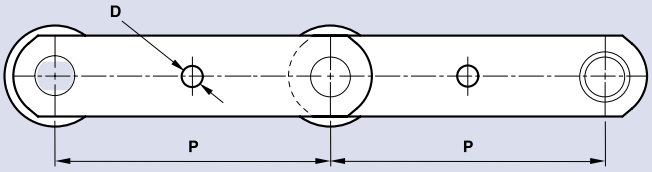

Chain	Technical Details One hole				Technical Details Two holes			
Breaking Load	**Minimum Pitch Bush Chain**	**Minimum Pitch Small Roller**	**Minimum Pitch Large Roller**	**Hole Diameter**	**Minimum Pitch***	**Attachment Hole Pitch**	**Hole Diameter**	**Cone Diameter**
lbf	**P (min)**	**P (min)**	**P (min)**	**D**	**P (min)**	**A**	**B**	**C**
3000	50.8	50.8	76.2	6.65	-	-	-	-
6000	-	95.3	-	9.9	95.3	38.1	8.3	14.7
7500	-	95.3	-	9.9	127.0	63.5	8.3	14.7
12000/15000	-	-	133.35	13.1	101.6	25.4	9.9	17.8
					108.0	34.9	9.9	17.8
					139.7	60.3	9.9	17.8
					177.8	101.6	9.9	17.8
24000/30000	-	-	190.5	19.4	127.0	34.9	9.9	17.8
					152.4	60.3	9.9	17.8
					171.5	82.6	9.9	17.8
					190.5	101.6	9.9	17.8
					228.6	139.7	9.9	17.8
36000/45000	241.3	241.3	317.5	22.6	152.4	44.5	11.5	20.8
					190.5	82.6	11.5	20.8
					228.6	114.3	11.5	20.8
					304.8	190.5	11.5	20.8
60000	241.3	241.3	317.5	22.6	152.4	44.5	11.5	20.8
					190.5	82.6	11.5	20.8
					222.3	114.3	11.5	20.8
					298.5	190.5	11.5	20.8
90000	279.4	279.4	330.2	29.0	177.8	50.8	16.7	30.5
					228.6	108.0	16.7	30.5
					304.8	184.2	16.7	30.5

* BASED ON SMALL PLAIN ROLLER - WILL BE INCREASED PRO RATA FOR OTHER TYPES.

Conveyor Chain

BS Extended Bearing Pins

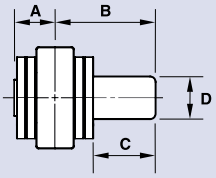

Chain	Technical Details				
Breaking Load	**Centre Distance To rivet End**	**Centre Distance To pin End**	**Extension Length**	**Extension Diameter**	**Mass (kg)**
lbf	**A**	**B**	**C**	**D**	
3000	11.0	35.0	25.4	11.0	0.020
7500	19.0	55.0	38.0	16.0	0.059
15000	23.0	65.0	44.5	22.2	0.132
30000	30.0	84.0	57.2	28.6	0.286
45000	41.2	107.2	70.0	35.0	0.522
60000	40.0	107.2	70.0	35.0	0.522
90000	47.0	113.3	70.0	38.0	0.620

N.B EXTENDED BEARING PINS ARE AN INTEGRAL PART OF THE CHAIN ASSEMBLY AND CANNOT BE REMOVED WITHOUT DISMANTLING THE CHAIN .
EXTENDED BEARING PINS CAN BE SPECIFIED AT ANY PITCH POINT OF THE CHAIN.
EXTENSIONS ARE CASE - HARDENED OR CAN REMAIN SOFT TO SUIT CUSTOMERS REQUIREMENTS.

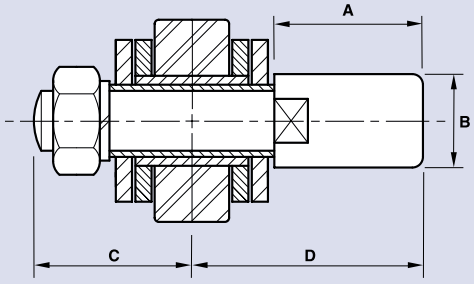

Type 1

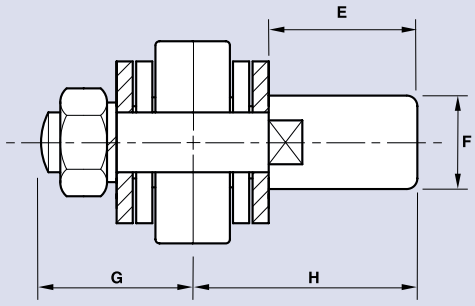

Type 2

Chain	Technical Details Spigot pins-Through hollow pin type 1				Spigot pins-Mid pitch on outer link type 2				
Breaking Load lbf	Extended Length A	Extension Diameter B	Centre Distance To nut End C	Centre Distance To Pin End D	Extended Length E	Extension Diameter F	Centre Distance To nut End G	Centre Distance To pin End H	Mass (kg)
3000	-	-	-	-	25.4	11.0	17.0	35.0	0.036
6000	38.1	16.0	31.0	57.0	38.1	16.0	29.2	56.0	0.112
7500	-	-	-	-	38.1	16.0	29.2	56.0	0.112
12000	44.5	19.0	36.30	66.3	44.5	19.0	34.3	64.8	0.200
15000	-	-	-	-	44.5	19.0	34.3	64.8	0.200
24000	57.2	28.6	48.0	85.3	57.2	28.6	45.7	83.8	0.560
30000	-	-	-	-	57.2	28.6	45.7	83.8	0.560
36000	70.0	31.8	61.0	109.0	70.0	31.8	58.5	107.0	0.900
45000	-	-	-	-	70.0	31.8	58.5	107.0	0.900
60000	-	-	-	-	70.0	31.8	58.5	107.0	0.900
90000	-	-	-	-	70.0	38.0	71.0	113.0	1.490

Conveyor Chain

BS Outboard Rollers

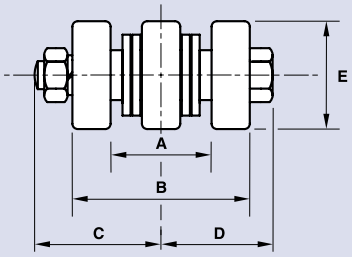

Chain Technical Details

Breaking Load lbf	Distance Between Outboard Rollers A	Distance Over Outboard Rollers B	Centre Distance To nut End C	Centre Distance To bolt End D	Roller Diameter E	Mass (kg)	Roller Load Per Pitch Point (kg)
6000	44.45	75.0	55.6	46.5	33.3	0.26	165
12000	50.80	88.9	68.5	57.0	50.8	0.73	290
24000	66.00	118.0	86.6	75.7	69.9	1.94	545
36000	94.00	171.5	113.5	106.0	92.1	4.74	725

BALL BEARING OUTBOARD ROLLERS
BOLTED THROUGH HOLLOW BEARING PINS

HOLLOW BEARING PINS DEEP LINK SOLID BEARING PINS DEEP LINK

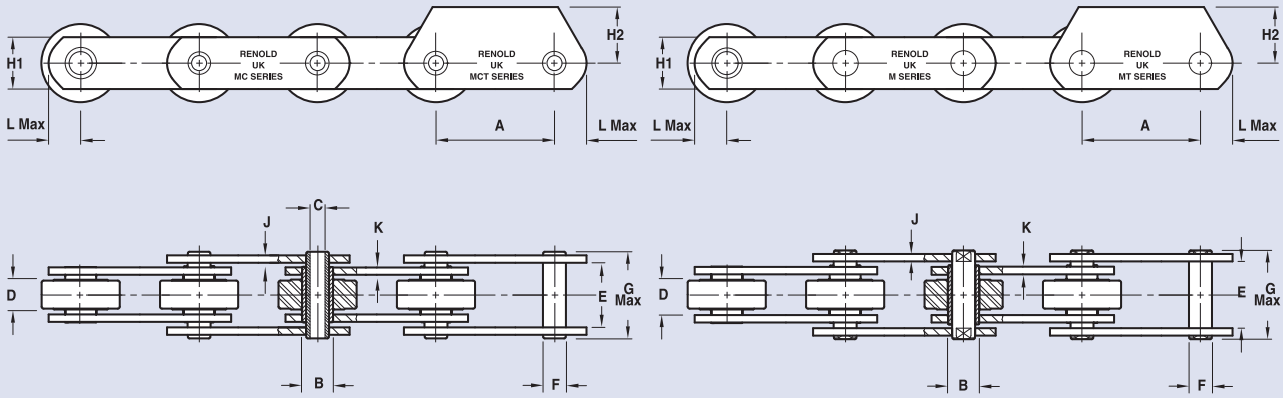

Hollow Bearing Pin

Chain Technical Details

Chain No	Breaking Load Min Newtons	PITCH Min A	PITCH Max A	BUSH Dia Max B	Hollow Bearing Pin Bore Dia Min C	INSIDE Width Inner Min D	Width Outer Min E	PIN Dia Max F	Len Max G	Plate Height H1	Height H2	Width Outer J	Width Inner K	Head Max L
MC56	56000	80	250	21.0	10.2	24.0	33.7	15.5	46.5	35.0	32.5	4.0	4.0	19.4
MC112	112000	100	315	29.0	14.3	32.0	45.7	22.0	63.0	50.0	45.0	6.0	6.0	27.3
MC224	224000	160	500	41.0	20.3	43.0	60.8	31.0	83.0	70.0	65.0	8.0	8.0	37.8

Solid Bearing Pin

Chain Technical Details

Chain No	Breaking Load Min Newtons	PITCH Min A	PITCH Max A	BUSH Dia Max B	Hollow Bearing Pin Bore Dia Min C	INSIDE Width Inner Min D	Width Outer Min E	PIN Dia Max F	Len Max G	Plate Height H1	Height H2	Width Outer J	Width Inner K	Head Max L
M40	40000	63	250	12.5	-	20.0	28.3	8.5	41.0	25.0	22.5	3.5	3.5	15.0
M56	56000	63	250	15.0	-	24.0	33.3	10.0	46.5	30.0	30.0	4.0	4.0	17.5
M80	80000	80	315	18.0	-	28.0	39.4	12.0	55.0	35.0	32.5	5.0	5.0	20.2
M112	112000	80	400	21.0	-	32.0	45.5	15.0	63.5	40.0	40.0	5.0	6.0	23.0
M160	160000	100	500	25.0	-	37.0	52.5	18.0	73.5	50.0	45.0	6.0	7.0	29.0
M224	224000	125	630	30.0	-	43.0	60.6	21.0	84.0	60.0	60.0	6.0	8.0	35.0
M315	315000	160	630	36.0	-	48.0	70.7	25.0	97.0	70.0	65.0	8.0	10.0	38.1
M450	450000	200	800	42.0	-	56.0	82.8	30.0	114.0	80.0	80.0	10.0	12.0	43.4
M630	630000	250	1000	50.0	-	66.0	97.0	36.0	133.0	100.0	90.0	14.0	14.0	54.1
M900	900000	250	1000	60.0	-	78.0	113.0	44.0	153.0	120.0	120.0	16.0	16.0	64.7

DIMENSIONS LISTED ABOVE WILL NOT VARY WITH PITCH SIZE IN EACH GIVEN BREAKING LOAD.
STAINLESS AND ZINC PLATED CHAINS ARE AVAILABLE TO ORDER.
FOR THE DETAILS OF INDIVIDUAL PITCH SIZES, ROLLERS, AND SPARE LINKS, SEE PAGES 24 - 29.
FOR ATTACHMENTS SEE PAGES 30 - 34.

Conveyor Chain

ISO Standard and Deep Link

Pitch mm	Chain No Bush type 0	Mass kg/m	Deep link Bush type 0	Mass Kg/m
M40 40000N Breaking Load - Solid Pin				
63	B60040/63	2.29	B67040/63	3.09
80	B60040/80	2.11	B67040/80	2.84
100	B60040/100	1.97	B67040/100	-
125	B60040/125	1.86	B67040/125	-
160	B60040/160	1.76	B67040/160	2.37
200	B60040/200	1.70	B67040/200	2.29
250	B60040/250	1.63	B67040/250	2.18
M56 56000N Breaking Load - Solid Pin				
63	B60060/63	3.50	-	-
80	B60060/80	3.20	B67060/80	4.23
100	B60060/100	2.90	B67060/100	-
125	B60060/125	2.70	B67060/125	-
160	B60060/160	2.50	B67060/160	3.46
200	B60060/200	2.40	B67060/200	3.35
250	B60060/250	2.30	B67060/250	3.24
MC56 56000N Breaking Load - Hollow Pin				
80	B50060/80	3.67	B57060/80	4.70
100	B50060/100	3.38	B57060/100	-
125	B50060/125	3.15	B57060/125	-
160	B50060/160	2.95	B57060/160	5.26
200	B50060/200	2.81	B57060.200	3.76
250	B50060/250	2.69	B57060/250	3.63
M80 80000N Breaking Load - Solid Pin				
80	B60080/80	4.51	B67080/80	5.98
100	B60080/100	4.13	B67080/100	-
125	B60080/125	3.83	B67080/125	-
160	B60080/160	3.57	B67080/160	4.91
200	B60080/200	3.38	B67080/200	4.74
250	B60080/250	3.32	B67080/250	4.66
315	B60080/315	3.20	B67080/315	4.52
M112 112000N Breaking Load - Solid Pin				
80	B60110/80	6.30	-	-
100	B60110/100	5.60	B67110/100	8.28
125	B60110/125	5.80	B67110/125	-
160	B60110/160	5.37	B67110/160	-
200	B60110/200	4.63	B67110/200	7.06
250	B60110/250	4.43	B67110//250	6.81
315	B60110/315	4.10	B67110/315	6.44
400	B60110/400	3.90	B67110/400	5.78

Pitch mm	Chain No Bush type 0	Mass kg/m	Deep link Bush type 0	Mass Kg/m
MC112 112000N Breaking Load - Hollow Pin				
100	B50110/100	7.60	B57110/100	10.28
125	B50110/125	6.96	B57110/125	-
160	B50110/160	6.40	B57110/160	-
200	B50110/200	6.00	B57110/200	8.43
250	B50110/250	5.68	B57110/250	8.06
315	B50110/315	5.42	B57110/315	7.76
M160 160000N Breaking Load - Solid Pin				
100	B60160/100	9.80	B67160/100	12.42
125	B60160/125	8.50	B67160/125	-
160	B60160/160	7.80	B67160/160	-
200	B60160/200	7.30	B67160/200	9.82
250	B60160/250	6.90	B67160/250	9.39
315	B60160/315	6.57	B67160/315	9.04
400	B60160/400	6.30	B67160/400	8.74
500	B60160/500	6.08	B67160/500	8.48
M224 224000N Breaking Load - Solid Pin				
125	B60220/125	12.30	-	-
160	B60220/160	11.10	B67220/160	18.04
200	B60220/200	10.20	B67220/200	16.42
250	B60220/250	9.60	B67220/250	15.31
315	B60220/315	8.98	B67220/315	14.29
400	B60220/400	8.50	B67220/400	13.50
500	B60220/500	8.10	B67220/500	12.85
630	B60220/630	7.80	B67220/630	12.00
MC224 224000N Breaking Load - Hollow Pin				
160	B50220/160	12.45	B57220/160	19.39
200	B50220/200	10.77	B57220.200	16.99
250	B50220/250	9.94	B57220/250	15.58
315	B50220/315	9.30	B57220/315	14.61
400	B50220/400	8.62	B57220/400	13.62
500	B50220/500	8.15	B57220/500	12.90
M315 315000N Breaking Load - Solid Pin				
160	B60320/160	19.20	-	-
200	B60320/200	16.70	B67320/200	25.07
250	B60320/250	15.60	B67320/250	23.25
315	B60320/315	14.70	B67320/315	21.74
400	B60320/400	13.80	B67320/400	20.33
500	B60320/500	13.20	B67320/500	19.40
630	B60320/630	12.80	B67320/630	18.31
M450 450000N Breaking Load - Solid Pin				
200	B60450/200	23.90	B67450/200	38.49
250	B60450/250	22.12	B67450/250	35.39
315	B60450/315	20.65	B67450/315	32.69
400	B60450/400	19.45	B67450/400	30.50
500	B60450/500	18.56	B67450/500	28.87
630	B60450/630	17.83	B67450/630	27.23
800	B60450/800	17.22	B67450/800	25.22
M630 630000N Breaking Load - Solid Pin				
250	B60630/250	35.28	B67630/250	51.81
315	B60630/315	32.53	B67630/315	47.33
400	B60630/400	30.30	B67630/400	43.87
500	B60630/500	28.64	B67630/500	41.29
630	B60630/630	27.27	B67630/630	38.70
800	B60630/800	26.15	B67630/800	35.65
1000	B60630/1000	25.32	B67630/1000	33.92
M900 900000N Breaking Load - Solid Pin				
250	B60900/250	53.20	-	-
315	B60900/315	48.20	B67900/315	77.37
400	B60900/400	44.50	B67900/400	70.72
500	B60900/500	41.60	B67900/500	65.58
630	B60900/630	39.20	B67900/630	61.57
800	B60900/800	37.25	B67900/800	56.51
1000	B60900/1000	35.80	B67900/1000	54.10

Pitch mm	Chain No Roller type 2	Mass kg/m	Chain No Roller type 3	Mass Kg/m
M40 40000N Breaking Load - Solid Pin				
63	B60042/63	4.33	B60043/63	4.57
80	B60042/80	3.70	B60043/80	3.90
100	B60042/100	3.25	B60043/100	3.40
125	B60042/125	2.88	B60043/125	3.00
160	B60042/160	2.56	B60043/160	2.65
200	B60042/200	2.32	B60043/200	2.40
250	B60042/250	2.14	B60043/250	2.20
M56 56000N Breaking Load - Solid Pin				
80	B60062/80	5.53	B60063/80	6.20
100	B60062/100	4.80	B60063/100	5.35
125	B60062/125	4.22	B60063/125	4.65
160	B60062/160	3.70	B60063/160	3.95
200	B60062/200	3.35	B60063/200	3.60
250	B60062/250	3.06	B60063/250	3.22
MC56 56000N Breaking Load - Hollow Pin				
80	B50062/80	6.68	B50063/80	7.54
100	B50062/100	5.78	B50063/100	6.48
125	B50062/125	5.06	B50063/125	5.63
160	B50062/160	4.43	B50063/160	4.89
200	B50062/200	3.98	B50063/200	4.36
250	B50062/250	3.62	B50063/250	3.93
M80 80000N Breaking Load - Solid Pin				
80	B60082/80	9.26	B60083/80	9.88
100	B60082/100	7.95	B60083/100	8.45
125	B60082/125	6.90	B60083/125	7.30
160	B60082/160	5.98	B60083/160	6.30
200	B60082/200	5.32	B60083/200	5.57
250	B60082/250	4.80	B60083/250	5.00
315	B60082/315	4.36	B60083/315	4.52
M112 112000N Breaking Load - Solid Pin				
100	B60112/100	11.30	B60113/100	12.25
125	B60112/125	9.80	B60113/125	10.58
160	B60112/160	8.48	B60113/160	9.05
200	B60112/200	7.55	B60113/200	7.95
250	B60112/250	6.80	B60113/250	7.10
315	B60112/315	6.18	B60113/315	6.50
400	B60112/400	5.67	B60113/400	5.85

Pitch mm	Chain No Roller type 2	Mass kg/m	Chain No Roller type 3	Mass Kg/m
MC112 112000N Breaking Load - Hollow Pin				
100	B50112/100	14.90	B50113/100	16.20
125	B50112/125	12.80	B50113/125	13.84
160	B50112/160	10.96	B50113/160	11.78
200	B50112/200	9.65	B50113/200	10.3
250	B50112/250	8.60	B50113/250	9.12
315	B50112/315	7.73	B50113/315	8.15
M160 160000N Breaking Load - Solid Pin				
125	B60162/125	15.46	B60163/125	16.50
160	B60162/160	13.24	B60163/160	14.05
200	B60162/200	11.65	B60163/200	12.30
250	B60162/250	10.38	B60163/250	10.90
315	B60162/250	9.33	B60163/315	9.74
400	B60162/400	8.48	B60163/400	8.80
500	B60162/500	7.83	B60163/500	8.10
M224 224000N Breaking Load - Solid Pin				
160	B60222/160	20.00	B60223/160	22.30
200	B60222/200	17.50	B60223/200	19.10
250	B60222/250	15.50	B60223/250	16.65
315	B60222/315	13.84	B60223/315	14.70
400	B60222/400	12.50	B60223/400	13.00
500	B60222/500	11.50	B60223/500	11.70
630	B60222/630	10.67	B60223/630	11.10
MC224 224000N Breaking Load - Hollow Pin				
160	B50222/160	21.75	B50223/160	22.87
200	B50222/200	18.65	B50223/200	19.84
250	B50222/250	16.17	B50223/250	17.18
315	B50222/315	14.12	B50223/315	14.85
400	B50222/400	12.45	B50223/400	13.10
500	B50222/500	11.21	B50223/500	11.70
M315 315000N Breaking Load - Solid Pin				
200	B60322/200	29.00	B60323/200	31.00
250	B60322/250	25.40	B60323/250	27.00
315	B60322/315	22.43	B60323/315	23.60
400	B60322/400	20.00	B60323/400	21.00
500	B60322/500	18.20	B60323/500	19.00
630	B60322/630	16.70	B60323/630	17.20
MC450 450000N Breaking Load - Solid Pin				
200	B60452/200	44.50	B60453/200	47.56
250	B60452/250	38.60	B60453/250	41.05
315	B60452/315	33.73	B60453/315	35.67
400	B60452/400	29.75	B60453/400	31.28
500	B60452/500	26.80	B60453/500	28.02
630	B60452/630	24.37	B60453/630	25.34
800	B60452/800	22.37	B60453/800	23.13
M630 630000N Breaking Load - Solid Pin				
250	B60632/250	60.40	B60633/250	71.28
315	B60632/315	52.47	B60633/315	61.10
400	B60632/400	46.00	B60633/400	52.75
500	B60632/500	41.20	B60633/500	46.64
630	B60632/630	37.24	B60633/630	41.55
800	B60632/800	34.00	B60633/800	37.40
1000	B60632/1000	31.60	B60633/1000	34.32
M900 900000N Breaking Load - Solid Pin				
315	B60902/315	83.33	B60903/315	88.41
400	B60902/400	72.00	B60903/400	76.00
500	B60902/500	63.60	B60903/500	66.80
630	M60902/630	56.67	B60903/630	59.20
800	M60902/800	51.00	B60903/800	53.00
1000	M60902/1000	46.80	B60903/1000	48.40

Conveyor Chain

ISO Standard

Pitch mm	Chain No Roller type 4	Mass kg/m	Chain No Roller type 6	Mass Kg/m
M40 40000N Breaking Load - Solid Pin				
63	B60044/63	2.59	B60046/63	4.57
80	B60044/80	2.34	B60046/80	3.90
100	B60044/100	2.15	B60046/100	3.40
125	B60044/125	2.00	B60046/125	3.00
160	B60044/160	1.87	B60046/160	2.65
200	B60044/200	1.78	B60046/200	2.40
250	B60044/250	1.70	B60046/250	2.20
M56 56000N Breaking Load - Solid Pin				
63	B60064/63	3.98	-	-
80	B60064/80	3.50	B60066/80	6.20
100	B60064/100	3.20	B60066/100	4.80
125	B60064/125	2.90	B60066/125	4.22
160	B60064/160	2.70	B60066/160	3.95
200	B60064/200	2.50	B60066/200	3.60
250	B60064/250	2.40	B60066/250	3.22
MC56 56000N Breaking Load - Hollow Pin				
80	B50064/80	4.65	B50066/80	7.54
100	B50064/100	4.16	B50066/100	6.48
125	B50064/125	3.77	B50066/125	5.63
160	B50064/160	3.44	B50066/160	4.89
200	B50064/200	3.20	B50066/200	4.36
250	B50064/250	3.00	B50066/250	3.93
M80 80000N Breaking Load - Solid Pin				
80	B60084/80	5.45	B60086/80	9.88
100	B60084/100	4.90	B60086/100	8.45
125	B60084/125	4.46	B60086/125	7.30
160	B60084/160	4.07	B60086/160	6.30
200	B60084/200	3.80	B60086/200	5.57
250	B60084/250	3.58	B60086/250	5.00
315	B60084/315	3.40	B60086/315	4.52
M112 112000N Breaking Load - Solid Pin				
80	B60114/80	7.20	-	-
100	B60114/100	6.00	B60116/100	12.25
125	B60114/125	5.80	B60116/125	10.58
160	B60114/160	5.37	B60116/160	9.05
200	B60114/200	5.00	B60116/200	7.95
250	B60114/250	4.75	B60116/250	7.10
315	B60114/315	4.60	B60116/315	6.40
400	B60114/400	4.45	B60116/400	5.85

Pitch mm	Chain No Roller type 4	Mass kg/m	Chain No Roller type 6	Mass Kg/m
MC112 112000N Breaking Load - Hollow Pin				
100	B50114/100	9.34	B50116/100	16.20
125	B50114/125	8.35	B50116/125	13.84
160	B50114/160	7.45	B50116/160	11.78
200	B50114/200	6.87	B50116/200	10.30
250	B50114/250	6.38	B50116/250	9.12
315	B50114/315	5.97	B50116/315	8.15
M160 160000N Breaking Load - Solid Pin				
100	B60164/100	11.20	-	-
125	B60164/125	10.00	B60166/125	16.50
160	B60164/160	9.00	B60166/160	14.08
200	B60164/200	8.35	B60166/200	12.30
250	B60164/250	7.78	B60166/250	10.90
315	B60164/315	7.31	B60166/315	9.74
400	B60164/400	6.92	B60166/400	8.80
500	B60164/500	6.64	B60166/500	8.10
M224 224000N Breaking Load - Solid Pin				
125	B60224/125	14.05	-	-
160	B60224/160	12.40	B60226/160	22.30
200	B60224/200	11.28	B60226/200	19.10
250	B60224/200	10.40	B60226/250	16.65
315	B60224/315	9.60	B60226/315	14.70
400	B60224/400	8.90	B60226/400	13.00
500	B60224/500	8.50	B60226/500	11.70
630	B60224/630	8.00	B60226/630	11.10
MC224 224000N Breaking Load - Hollow Pin				
160	B50224/160	15.51	B50226/160	22.87
200	B50224/200	13.22	B50226/200	19.84
250	B50224/250	11.90	B50226/250	17.18
315	B50224/315	10.86	B50226/315	14.85
400	B50224/400	9.65	B50226/400	13.10
500	B50224/500	9.13	B50226/500	11.70
M315 315000N Breaking Load - Solid Pin				
160	B60324/160	21.16	-	-
200	B60324/200	18.40	B60326/200	31.00
250	B60324/250	16.90	B60326/250	27.00
315	B60324/315	15.70	B60326/315	23.60
400	B60324/400	14.70	B60326/400	21.00
500	B60324/500	13.90	B60326/500	19.00
630	B60324/630	13.30	B60326/630	17.20
M450 450000N Breaking Load - Solid Pin				
200	B60454/200	26.90	B60456/200	47.56
250	B60454/250	24.52	B60456/250	41.05
315	B60454/315	22.55	B60456/315	35.67
400	B60454/400	20.95	B60456/400	31.28
500	B60454/500	19.76	B60456/500	28.02
630	B60454/630	18.78	B60456/630	25.34
800	B60454/800	17.97	B60456/800	23.13
M630 630000N Breaking Load - Solid Pin				
250	B60634/250	38.80	B60636/250	71.28
315	B60634/315	25.32	B60636/315	61.10
400	B60634/400	32.50	B60636/400	52.75
500	B60634/500	30.40	B60636/500	46.64
630	B60634/630	28.66	B60636/630	41.55
800	B60634/800	27.25	B60636/800	37.40
1000	B60634/1000	26.20	B60636/1000	34.32
M900 900000N Breaking Load - Solid Pin				
250	B60904/250	55.80	-	-
315	B60904/315	50.48	B60906/315	88.41
400	B60904/400	46.12	B60906/400	76.00
500	B60904/500	42.90	B60906/500	66.80
630	B60904/630	40.24	B60906/630	59.20
800	B60904/800	38.00	B60906/800	53.00
1000	B60904/1000	36.45	B60696/1000	48.40

Pitch mm	Chain No Roller type 5	Mass kg/m	Deep link Roller type 5	Mass Kg/m
M40 40000N Breaking Load - Solid Pin				
63	B60045/63	4.33	B67045/63	5.13
80	B60045/80	3.70	B67045/80	4.43
100	B60045/100	3.25	B67045/100	-
125	B60045/125	2.88	B67045/125	-
160	B60045/160	2.56	B67045/160	3.17
200	B60045/200	2.32	B67045/200	2.91
250	B60045/250	2.14	B67045/250	2.69
M56 56000N Breaking Load - Solid Pin				
80	B60065/80	5.53	B67065/80	6.56
100	B60065/100	4.80	B67065/100	-
125	B60065/125	4.22	B67065/125	-
160	B60065/160	3.70	B67065/160	4.66
200	B60065/200	3.35	B67065/200	4.30
250	B60065/250	3.06	B67065/250	4.00
MC56 56000N Breaking Load - Hollow Pin				
80	B50065/80	6.68	B57065/80	7.71
100	B50065/100	5.78	B57065/100	-
125	B50065/125	-	B57065/125	-
160	B50065/160	4.43	B57065/160	6.74
200	B50065/200	3.98	B57065/200	4.93
250	B50065/250	3.62	B57065/250	4.56
M80 80000N Breaking Load - Solid Pin				
80	B60085/80	9.26	B67085/80	10.73
100	B60085/100	7.95	B67085/100	-
125	B60085/125	6.90	B67085/125	-
160	B60085/160	5.98	B67085/160	7.32
200	B60085/200	5.32	B67085/200	6.68
250	B60085/250	4.80	B67085/250	6.14
315	B60085/315	4.36	B67085/315	5.68
M112 112000N Breaking Load - Solid Pin				
100	B60115/100	11.30	B67115/100	13.98
125	B60115/125	9.80	B67115/125	-
160	B60115/160	8.48	B67115/160	-
200	B60115/200	7.55	B67115/200	9.98
250	B60115/250	6.80	B67115/250	9.18
315	B60115/315	6.18	B67115/315	8.52
400	B60115/400	5.67	B67115/400	7.55

Pitch mm	Chain No Roller type 5	Mass kg/m	Deep link Roller type 5	Mass Kg/m
MC112 112000N Breaking Load - Hollow Pin				
100	B50115/100	14.90	B57115/100	17.58
125	B50115/125	12.80	B57115/125	-
160	B50115/160	10.96	B57115/160	-
200	B50115/200	9.65	B57115/200	12.08
250	B50115/250	8.60	B57115/250	10.98
315	B50115/315	7.73	B57115/315	10.07
M160 160000N Breaking Load - Solid Pin				
125	B60165/125	15.46	B67165/125	-
160	B60165/160	13.24	B67165/160	-
200	B60165/200	11.65	B67165/200	14.17
250	B60165/250	10.38	B67165/250	12.87
315	B60165/315	9.33	B67165/315	11.80
400	B60165/400	8.48	B67165/400	10.92
500	B60165/500	7.83	B67165/500	10.23
M224 224000N Breaking Load - Solid Pin				
160	B60225/160	20.00	B67225/160	26.94
200	B60225/200	17.50	B67225/200	23.72
250	B60225/250	15.50	B67225/250	21.21
315	B60225/315	13.84	B67225/315	19.15
400	B60225/400	12.50	B67225/400	17.50
500	B60225/500	11.50	B67225/500	16.25
630	B60225/630	10.67	B67225/630	14.87
MC224 224000N Breaking Load - Hollow Pin				
160	B50225/160	21.75	B57225/160	28.69
200	B50225/200	18.65	B57225/200	24.87
250	B50225/250	16.17	B57225/250	21.81
315	B50225/315	14.12	B57225/315	19.43
400	B50225/400	12.45	B57225/400	17.45
500	B50225/500	11.21	B57225/500	15.96
M315 315000N Breaking Load - Solid Pin				
160	-	-	-	-
200	B60325/200	29.00	B67325/200	37.37
250	B60325/250	25.40	B67325/250	33.05
315	B60325/315	22.43	B67325/315	29.47
400	B60325/400	20.00	B67325/400	26.53
500	B60325/500	18.20	B67325/500	24.40
630	B60325/630	16.70	B67325/630	22.21
M450 450000N Breaking Load - Solid Pin				
200	B60455/200	44.50	B67455/200	59.09
250	B60455/250	38.60	B67455/250	51.87
315	B60455/315	33.73	B67455/315	45.77
400	B60455/400	29.75	B67455/400	40.77
500	B60455/500	26.80	B67455/500	37.11
630	B60455/630	24.37	B67455/630	33.87
800	B60455/800	22.37	B67455/800	30.37
M630 630000N Breaking Load - Solid Pin				
250	B60635/250	60.40	B67635/250	76.93
315	B60635/315	52.47	B67635/315	67.27
400	B60635/400	46.00	B67635/400	59.57
500	B60635/500	41.20	B67635/500	53.85
630	B60635/630	37.24	B67635/630	48.67
800	B60635/800	34.00	B67635/800	43.50
1000	B60635/1000	31.60	B67635/1000	40.20
M900 900000N Breaking Load - Solid Pin				
315	B60905/315	83.33	B67905/315	112.50
400	B60905/400	72.00	B67905/400	98.22
500	B60905/500	63.60	B67905/500	87.58
630	B60905/630	56.67	B67905/630	79.04
800	B60905/800	51.00	B67905/800	70.26
1000	B60905/1000	46.80	B67905/1000	65.10

Conveyor Chain

ISO Rollers

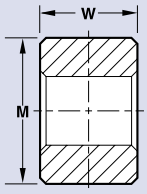

SMALL ROLLER
Type 4- Case Hardened Steel

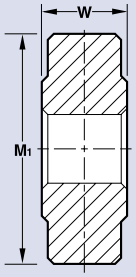

PLAIN ROLLER
Type 2- Steel
Type 5 - Case Hardened Steel

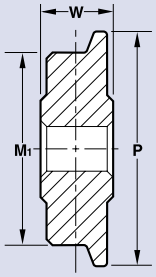

FLANGED ROLLER
Type 3- Steel
Type 6 - Case Hardened Steel

Hollow Bearing Pin Rollers

Chain — Technical Details

Chain No	Breaking Load Newtons	SMALL ROLLER-TYPE 4 Tread Dia M	SMALL ROLLER-TYPE 4 Roller Width W	PLAIN ROLLER-TYPE 2 & 5 Tread Dia M1	PLAIN ROLLER-TYPE 2 & 5 Roller Width W	FLANGED ROLLER-TYPE 3 & 6 Tread Dia M1	FLANGED ROLLER-TYPE 3 & 6 Flange Dia P	FLANGED ROLLER-TYPE 3 & 6 Roller Width W
MC56	56000	30.0	23.0	50.0	23.0	50.0	60.0	23.0
MC112	112000	42.0	31.0	70.0	31.0	70.0	85.0	31.0
MC224	224000	60.0	42.0	100.0	42.0	100.0	120.0	42.0

Solid Bearing Pin Rollers

Chain — Technical Details

Chain No	Breaking Load Newtons	SMALL ROLLER-TYPE 4 Tread Dia M	SMALL ROLLER-TYPE 4 Roller Width W	PLAIN ROLLER-TYPE 2 & 5 Tread Dia M1	PLAIN ROLLER-TYPE 2 & 5 Roller Width W	FLANGED ROLLER-TYPE 3 & 6 Tread Dia M1	FLANGED ROLLER-TYPE 3 & 6 Flange Dia P	FLANGED ROLLER-TYPE 3 & 6 Roller Width W
M40	40000	18.0	19.0	36.0	19.0	36.0	42.0	19.0
M56	56000	21.0	23.0	42.0	23.0	42.0	50.0	23.0
M80	80000	25.0	27.0	50.0	27.0	50.0	60.0	27.0
M112	112000	30.0	31.0	60.0	31.0	60.0	70.0	31.0
M160	160000	36.0	36.0	70.0	36.0	70.0	85.0	36.0
M224	224000	42.0	42.0	85.0	42.0	85.0	100.0	42.0
M315	315000	50.0	47.0	100.0	47.0	100.0	120.0	47.0
M450	450000	60.0	55.0	120.0	55.0	120.0	140.0	55.0
M630	630000	70.0	65.0	140.0	65.0	140.0	170.0	65.0
M900	900000	85.0	76.0	170.0	76.0	170.0	210.0	76.0

ROLLER SELECTION DETAILS - SEE PAGE 75.

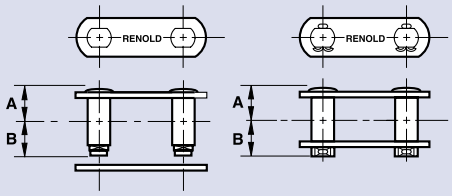

No 107
RIVETING LINK

No 58A
SPLIT PIN LINK

Hollow Bearing Pin Chain - Connecting Links

Chain | Technical Details

Chain No	Breaking Load Newtons	No 107 Chain Plain Side A	Centre to Fastener Side B	No 58A# Chain Chain Side A	Centre to Fastener Side B
MC56	56000	22.9	22.9	22.9	29.1
MC112	112000	31.2	31.2	31.2	38.7
MC224	224000	41.2	41.2	41.2	50.9

JOINTS MARKED '#' HAVE SOLID CONNECTING PINS

Solid Bearing Pin Chain - Connecting Links

Chain | Technical Details

Chain No	Breaking Load Newtons	No 107 Chain Plain Side A	Centre to Fastener Side B	No 58A Chain Chain Side A	Centre to Fastener Side B
M40	40000	20.2	20.2	20.2	24.2
M56	56000	23.1	23.1	23.1	29.2
M80	80000	27.3	27.3	27.3	33.4
M112	112000	31.4	31.4	31.4	38.9
M160	160000	36.6	36.6	36.6	44.6
M224	224000	41.7	41.7	41.7	51.4
M315	315000	48.4	48.4	48.4	58.6
M450	450000	56.6	56.6	56.6	70.0
M630	630000	65.9	65.9	65.9	79.1
M900	900000	76.1	76.1	76.1	93.5

Conveyor Chain - Solid Pin Type

ISO K Attachments (Welded)

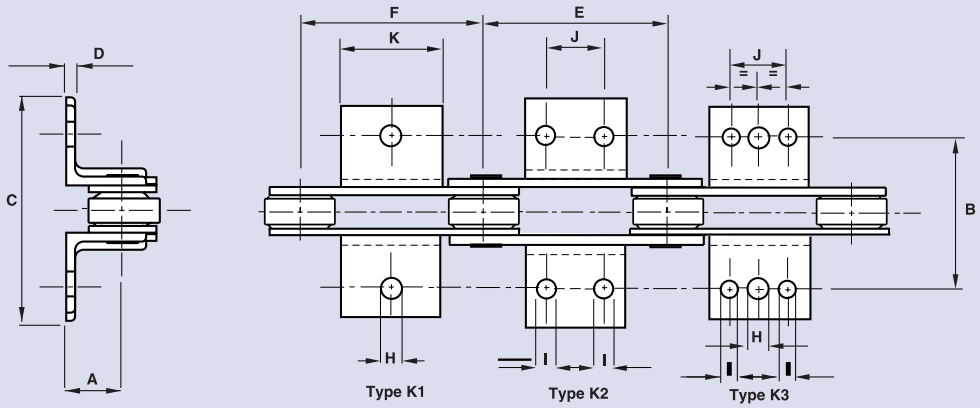

Solid Bearing Pin

Chain Technical Details

Chain No	Breaking Load Newtons	Platform Height A	Transverse Pitch B	Width Over Attachment Inner/Outer C (max)	Attachment Thickness Inner/Outer D	Attachment Type	Attachment Minimum Outer Pitch E	Attachment Minimum Inner Pitch F	Centre Hole Dia H	Outer Holes Dia I	Hole Pitch J	Platform Length K	Mass (kg/Att)
M40	40000	25	70	101 / 110	3.5	K1	63	63	9.0	-	-	20	0.04
						K2	80	80	-	9.0	20	40	0.078
						K3	100	100	9.0	9.0	40	60	0.11
						K3	125	125	9.0	9.0	65	85	0.15
M56	56000	30	88	116 / 126	5.0	K1	63	63	11.0	-	-	25	0.04
						K2	100	100	-	11.0	25	50	0.07
						K3	125	125	11.0	11.0	50	75	0.11
						K3	160	160	11.0	11.0	85	110	0.15
M80	80000	35	96	132 / 135	5.0	K1	80	80	11.0	-	-	25	0.10
						K3	125	125	11.0	11.0	50	75	0.25
						K3	160	160	11.0	11.0	85	110	0.37
						K3	200	200	11.0	11.0	125	150	0.50
M112	112000	40	110	150 / 164	6.0	K1	80	80	14.0	-	-	30	0.20
						K2	125	125	-	14.0	35	65	0.35
						K3	160	160	14.0	14.0	65	95	0.50
						K3	200	200	14.0	14.0	100	130	0.75
M160	160000	45	124	178 / 193	6.0	K1	100	100	14.0	-	-	30	0.20
						K2	160	160	-	14.0	50	80	0.45
						K3	200	200	14.0	14.0	85	115	0.65
						K3	250	250	14.0	14.0	145	175	0.95
M224	224000	55	140	206 /224	8.0	K1	125	125	18.0	-	-	40	0.30
						K2	200	200		18.0	65	105	0.80
						K3	250	250	18.0	18.0	125	165	1.20
						K3	315	315	18.0	18.0	190	230	1.65
M315	315000	65	160	216 / 240	10.0	K1	160	160	18.0	-	-	35	0.50
						K2	200	200	-	18.0	50	85	0.85
						K2	250	250	-	18.0	100	135	1.40
						K2	315	315	-	18.0	155	190	1.85
M450	450000	75	180	228 / 255	10.0	K1	200	200	18.0	-	-	40	0.60
						K2	250	250	-	18.0	85	125	1.40
						K2	315	315	-	18.0	155	195	2.40
						K2	400	400	-	18.0	240	280	3.50
M630	630000	90	230	302 / 333	12.0	K1	250	250	24.0	-	-	50	1.30
						K2	315	315	-	24.0	100	150	3.70
						K2	400	400	-	24.0	190	240	5.60
						K2	500	500	-	24.0	300	350	7.50
M900	900000	110	280	358 / 393	15.0	K1	250	250	30.0	-	-	60	1.70
						K2	315	315	-	30.0	65	125	4.80
						K2	400	400	-	30.0	155	215	7.50
						K2	500	500	-	30.0	240	300	9.80

Conveyor Chain - Hollow Pin Type

ISO K Attachments (Welded)

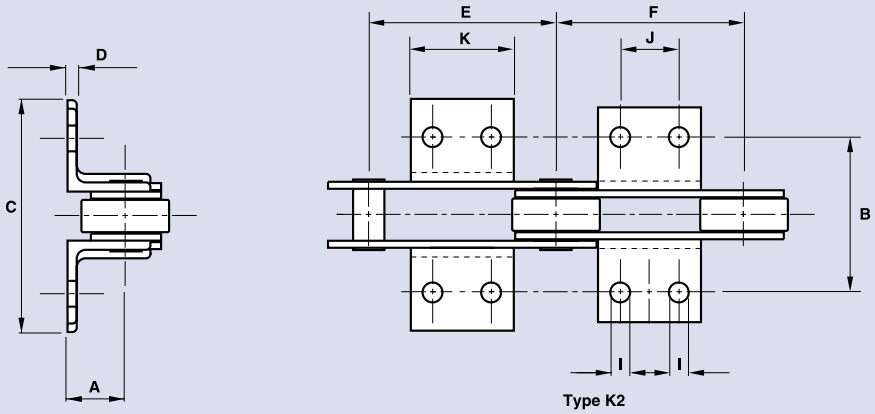

Hollow Bearing Pin

Chain Technical Details

Chain No	Breaking Load Newtons	Platform Height A	Transverse Pitch B	Width Over Attachment Inner/Outer C Max	Attachment Thickness Inner/Outer D	Attachment Type	Attachment Minimum Outer Pitch E	Attachment Minimum Inner Pitch F	Outer Holes Dia I	Hole Pitch J	Platform Length K	Mass (kg/Att)
MC56	56000	35	88	126 / 137	5.0	K2	125	125	11	50	75	0.25
						K2	160	160	11	85	110	0.36
						K2	200	200	11	125	150	0.50
MC112	112000	45	110	171 / 186	6.0	K2	160	160	14	50	80	0.45
						K2	200	200	14	85	115	0.60
						K2	250	250	14	145	175	0.90
MC224	224000	65	140	206 / 220	8.0	K2	200	200	18	50	85	0.85
						K2	250	250	18	100	135	1.35
						K2	315	315	18	155	190	1.90

Conveyor Chain

ISO F Attachments (Welded)

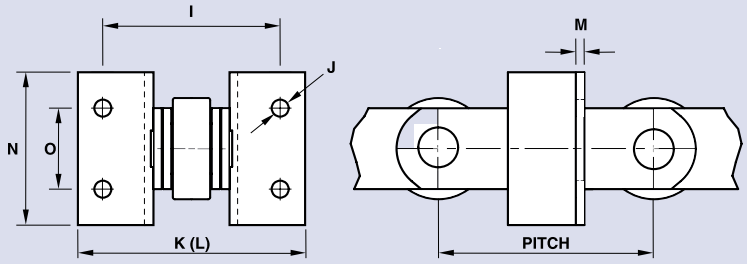

Chain Technical Details F2 Attachments

Chain No	Breaking Load Newtons	Minimum Pitch Inner Plate	Minimum Pitch Outer Plate	Transverse Pitch I	Attachment Hole Size J	Width Over Att Outer Plate K	Width Over Att Inner Plate L	Attachment Thickness M	Attachment Face Height N	Pitch of Attachment Holes O	Mass (kg)
M40	40000	80.0	80.0	70.0	9.0	110.0	101.0	3.5	40.0	20.0	0.085
M56	56000	100.0	100.0	88.0	11.0	126.0	116.0	5.0	50.0	25.0	0.204
MC56	56000	100.0	100.0	88.0	11.0	137.0	126.0	5.0	75.0	50.0	0.283
M80	80000	100.0	100.0	96.0	11.0	135.0	132.0	5.0	75.0	50.0	0.283
M112	112000	125.0	125.0	110.0	14.0	164.0	150.0	6.0	65.0	35.0	0.324
MC112	112000	125.0	125.0	110.0	14.0	186.0	171.0	6.0	80.0	50.0	0.629
M160	160000	125.0	125.0	124.0	14.0	193.0	178.0	6.0	80.0	50.0	8.629
M224	224000	160.0	160.0	140.0	18.0	224.0	206.0	8.0	105.0	65.0	1.078
MC224	244000	200.0	200.0	140.0	18.0	220.0	206.0	8.0	85.0	50.0	0.873
M315	315000	200.0	200.0	160.0	18.0	240.0	216.0	10.0	85.0	50.0	0.873
M450	450000	200.0	200.0	180.0	18.0	255.0	228.0	10.0	125.0	85.0	1.283
M630	630000	250.0	250.0	230.0	24.0	333.0	302.0	12.0	150.0	100.0	2.906
M900	900000	315.0	315.0	280.0	30.0	393.0	358.0	15.0	125.0	65.0	3.617

ISO L Attachments (Integral)

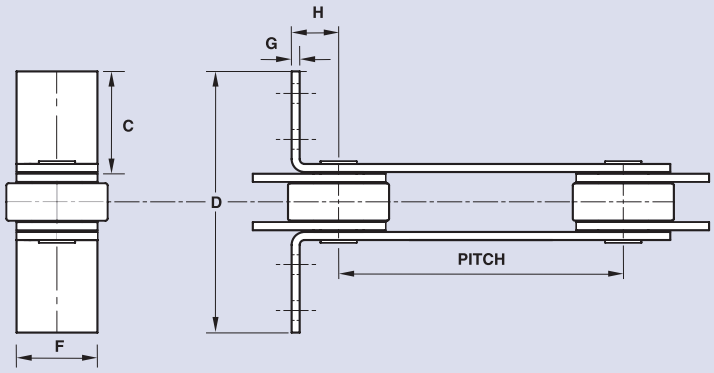

Chain Technical Details

Chain No	Breaking Load lbf	Type	Attachment Face Length C	Width Over Attachment Outer D	Total Height of Attachment F	Attachment Thickness G	Distance of Pitch point to Attachment Face H	Box Width*	Mass (kg)
M40	40000	L0	75.85	180.0	25.0	3.5	30.0	200.0	0.054
M56	56000	L0	98.35	230.0	30.0	4.0	30.0	250.0	0.089
M80	80000	L0	95.30	230.0	35.0	5.0	30.0	250.0	0.124
M112	11200	L0	104.75	255.0	40.0	6.0	30.0	275.0	0.157
M160	160000	L0	113.75	280.0	50.0	7.0	35.0	300.0	0.254
M224	224000	L0	134.70	330.0	60.0	8.0	40.0	350.0	0.364
M315	315000	L0	154.65	380.0	70.0	10.0	50.0	400.0	0.645
M450	450000	L0	173.60	430.0	80.0	12.0	60.0	450.0	1.027
M630	630000	L0	166.50	430.0	100.0	14.0	70.0	450.0	1.676

* ALTERNATIVE WIDTH AVAILABLE. PLEASE ENQUIRE.

Conveyor Chain - Holes in Link Plates

ISO Attachments

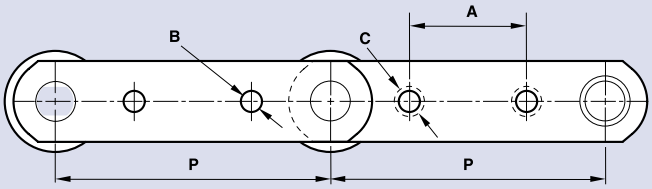

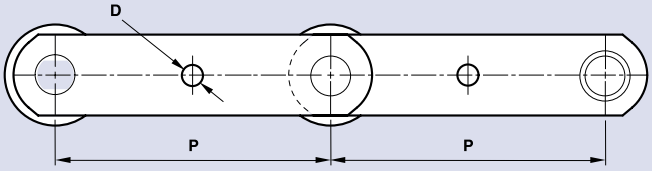

Chain	Technical Details		One hole			Technical Details	Two holes		
Chain No	**Breaking Load**	**Minimum Pitch Bush Chain**	**Minimum Pitch Small Roller**	**Minimum Pitch Large Roller**	**Hole Diameter**	**Minimum Pitch***	**Attachment Hole Pitch**	**Hole Diameter**	**Cone Diameter**
	Newtons	**P (min)**	**P (min)**	**P (min)**	**D**	**P (min)**	**A**	**B**	**C**
M40	40000	100.0	-	-	11.0	160.0	63.0	9.0	-
M56	56000	100.0	-	-	11.0	160.0	63.0	11.0	-
MC56	56000	100.0	-	-	11.0	160.0	80.0	11.0	-
M80	80000	100.0	-	-	15.0	200.0	80.0	11.0	-
M112	112000	125.0	-	-	15.0	200.0	80.0	14.0	-
MC112	112000	125.0	-	-	15.0	200.0	100.0	14.0	-
M160	160000	160.0	-	-	21.0	250.0	100.0	14.0	-
M224	224000	160.0	-	-	21.0	250.0	100.0	18.0	-
MC224	224000	160.0	-	-	21.0	315.0	125.0	18.0	-
M315	315000	200.0	-	-	25.0	315.0	125.0	18.0	-
M450	450000	200.0	-	-	30.0	315.0	125.0	18.0	-
M630	630000	250.0	-	-	36.0	400.0	160.0	24.0	-
M900	900000	315.0	-	-	45.0	500.0	200.0	30.0	-

* BASED ON SMALL PLAIN ROLLER - WILL BE INCREASED PRO RATA FOR OTHER TYPES.

Renold Agricultural Chain

In todays' world of sophisticated agricultural and processing equipment, the name RENOLD is the guarantee of outstanding quality and reliability.

Renold have been designing and manufacturing chains since 1879, in collaboration with the leading manufacturers of crop harvesting and processing equipment.

Engineering design detail and precision manufacturing techniques have earned Renold the ISO 9000 (BS 5750) quality assurance standards, resulting in a range of chains giving longer life under the most arduous conditions.

Popular applications for this type of chain are:

- Combine Harvesters
- Vegetable Grading Conveyors
- Grain Elevators
- Round Balers
- Circular Bale Unrollers
- Back-Feed Hoppers
- Box Scrapers
- Fruit Packing Conveyors

Renold agricultural chains are also used in general light handling and elevating applications.

Renold CA 550 Chain

In addition to extra strength chains, Renold also offers the CA 550 straight side plate chain.

This chain, which complies with the American Standard, has become common place world-wide within the agricultural industry.

Many Renold customers fit this chain because of its robust construction and ability to cope with extremely abrasive conditions.

Renold Extra Strength Chain

The standard range of Renold chain meets the majority of modern agricultural requirements.

However, with continually improving farming techniques and higher crop yields, Renold also offers a range of extra strength chains which are dimensionally identical to the standard range.

Heat treatment techniques are used to greatly enhance the breaking load and these chains have been adopted as a standard by major combine harvester manufacturers.

Being dimensionally the same as the standard chain, they are more cost effective by:

- Directly replacing standard chain using existing sprockets.
- Increased load handling capability.

These same advantages can also be realised when using extra strength chains to replace both malleable iron and pressed steel detachable link pintle chains.

Renold Works Standard Chain

Renold works standard chains have been developed in close liaison with machinery manufacturers to fulfil specific requirements.

The works standard range also demonstrates the Renold commitment to continual chain development for the international agricultural industry.

Renold Attachments and Sprockets

Our list of standard attachments is detailed for each chain shown in this section. Less popular, made to order attachments are also available on request.

The popular standard sprockets for this range of chains are also detailed. Modifications to these standard sprockets, made to order and special sprockets are also available on request.

Agricultural Chain

ISO 487/DIN 8189 and Works Standard

ISO 487

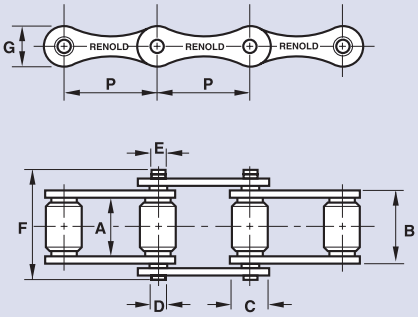

WORKS STANDARD

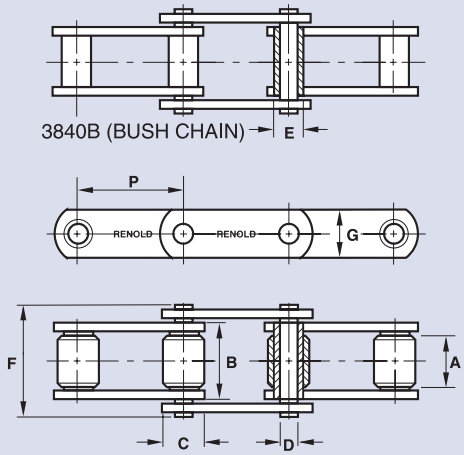

3000, 3840, 3840S, 3840B, 3840V AND CA550 HAVE STRAIGHT SIDE PLATES AS SHOWN

ISO 487 Chain

Chain			Technical Details											Connecting Links				
ISO No	STD Chain No	Extra Strength Chain No	Pitch Inch P	Pitch mm P	Inside Width Min A	Over Inner Plates Max B	Roller Dia Max C	Pin Dia Max D	Bush Dia E	Over Pin Max F	Plate Height Max G	Minimum Breaking Load Newtons	Weight kg/m	No 4	No 107	No 11	No 12	No 58A
S32	180488*		1.150	29.21	15.90	20.20	11.40	4.47	6.10	26.70	13.50	8000	0.76	✓	✓	✓#	✓	-
S32-H		590488*	1.150	29.21	15.90	20.20	11.40	4.47	6.10	26.70	13.50	19300	0.76	✓	✓	✓#	✓	-
S42	180519*		1.375	34.93	19.10	25.40	14.27	7.01	9.60	34.30	19.80	26700	1.61	✓	✓	✓#	✓	-
S42-H		590519*	1.375	34.93	19.10	25.40	14.27	7.01	9.60	34.30	19.80	43800	1.61	✓	✓	✓#	✓	-
S45	180581*		1.630	41.40	22.23	28.60	15.20	5.74	8.30	38.10	17.30	17800	1.46	✓	✓	✓#	✓	✓
S45-H		590581*	1.630	41.40	22.23	28.60	15.20	5.74	8.30	38.10	17.30	34200	1.46	✓	✓	✓#	✓	✓
S52	180538*		1.500	38.10	22.23	28.60	15.20	5.74	8.30	38.10	17.30	17800	1.56	✓	✓	✓#	✓	-
S52-H		590538*	1.500	38.10	22.23	28.60	15.20	5.74	8.30	38.10	17.30	34200	1.56	✓	✓	✓#	✓	-
S55	180570*		1.630	41.40	22.23	28.60	17.80	5.74	8.30	38.10	17.30	17800	1.65	✓	✓	✓#	✓	✓
S55-H		590570*	1.630	41.40	22.23	28.60	17.80	5.74	8.30	38.10	17.30	34200	1.65	✓	✓	✓#	✓	✓
S62	180558*		1.650	41.91	25.40	31.80	19.10	5.74	8.30	40.60	17.30	26700	1.87	✓	✓	✓#	✓	-
S62-H		590558*	1.650	41.91	25.40	31.80	19.10	5.74	8.30	40.60	17.30	34200	1.87	✓	✓	✓#	✓	-
S77	180671*		2.297	58.34	22.23	31.20	18.30	8.92	12.20	43.20	26.20	44500	2.57	✓	✓	✓	✓	-
S77-H		590671*	2.297	58.34	22.23	31.20	18.30	8.92	12.20	43.20	26.20	83600	2.57	✓	✓	✓	✓	-
S88	180708*		2.609	66.27	28.60	37.50	22.90	8.92	12.20	50.80	26.20	44600	3.26	✓	✓	✓	✓	-
S88-H		590708*	2.609	66.27	28.60	37.50	22.90	8.92	12.20	50.80	26.20	83600	3.26	✓	✓	✓	✓	-
CA550	184959		1.630	41.40	19.81	25.80	16.70	7.19	10.67	36.00	19.30	57000	2.08	✓	✓	✓	✓	-
CA557	180557		1.630	41.40	19.75	26.00	17.78	8.00	11.50	36.10	23.30	73400	2.60	✓	✓	✓	✓	-

* ZINC PLATED CHAIN

✓# JOINT HAS SINGLE LONG SPLIT PIN

Works Standard Chain

Chain			Technical Details												Connecting Links				
Works No	STD Chain No	Extra Strength Chain No	Pitch Inch P	Pitch mm P	Inside Width Min A	Over Inner Plates Max B	Roller Dia Max C	Pin Dia Max D	Hollow Pin Bore	Bush Dia E	Over Pin Max F	Plate Height Max G	Minimum Breaking Load Newtons	Weight kg/m	No 4	No 107	No 11	No 12	No 58A
3000			1.181	30.00	19.00	25.50	15.90	8.30	–	11.40	35.00	20.50	45000	2.56	✓	✓	✓	✓	✓
3840	590703		1.512	38.40	18.20	24.00	15.90	6.92	–	10.25	33.00	17.20	27000	1.70	✓	✓	-	✓	✓
3840S		590705	1.512	38.40	18.20	24.00	15.90	6.92	–	10.25	33.00	17.20	35000	1.70	✓	✓	-	✓	✓
3840B	590709		1.512	38.40	18.20	24.00	–	6.92	–	10.25	33.00	17.20	27000	1.27	✓	✓	-	✓	✓
3840V	590715		1.512	38.40	19.00	25.40	15.90	8.30	–	11.40	35.00	20.20	45000	1.94	✓	✓	-	✓	✓
S55R	184919*		1.630	41.40	22.23	31.20	18.00	8.92	–	12.20	43.10	22.40	44500	2.75	✓	✓	✓	✓	-
		590919*	1.630	41.40	22.23	31.20	18.00	8.92	–	12.20	43.10	22.40	80000	2.75	✓	✓	✓	✓	-
	186023		1.500	38.10	12.70	19.00	11.90	5.94	–	8.50	29.00	17.70	37700	1.40	✓	✓	✓	✓	-
	186063**		1.644	41.75	19.90	26.50	17.15	11.20	8.25	13.98	35.80	25.00	34300	2.18	✓	✓	✓	✓	-
	186073**		1.644	41.75	19.90	26.50	17.15	11.20	8.25	13.98	35.80	21.60	26500	2.28	✓	✓	✓	✓	-

* ZINC PLATED CHAIN

** HOLLOW BEARING PIN CHAIN

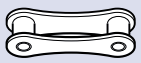

No.4

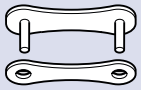

No.107

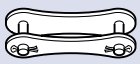

No.11

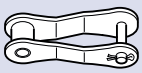

No.12

No.58A

ISO 487 ATTACHMENT

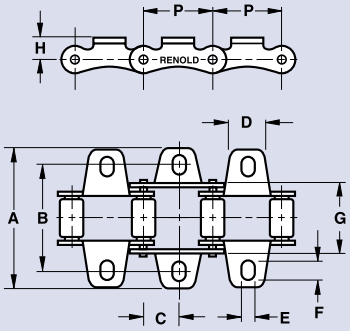

K1

WORKS STANDARD ATTACHMENT

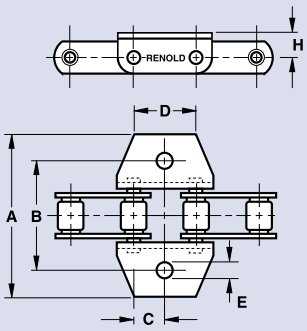

K9 - KV1
CA550 K1

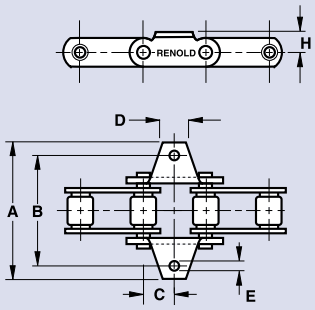

K1 - K2 - K3

ISO 487 K Attachment

Chain							Technical Details								
ISO No	STD Chain No	Extra Strength Chain No	Type K1	Joint No Inner	Joint No Outer	Joint No Con Link	A	Max B	Min B	C	D	E	F	G	H
S32	180488	590488	One Side	0103	0106	0101	61.0	44.5	41.3	14.6	14.0	5.3	6.9	24.4	8.6
			Both Sides	0104	0107	0102	61.0	44.5	41.3	14.6	14.0	5.3	6.9	24.4	8.6
S42	180519	590519	One Side	0103	0106	0101	74.9	57.2	50.8	17.5	17.8	8.3	11.5	31.8	14.0
			Both Sides	0104	0107	0102	74.9	57.2	50.8	17.5	17.8	8.3	11.5	31.8	14.0
S52	180538	590538	One Side	0103	0106	0101	77.5	60.3	57.2	19.1	19.0	8.3	9.9	35.1	11.4
			Both Sides	0104	0107	0102	77.5	60.3	57.2	19.1	19.0	8.3	9.9	35.1	11.4
S55	180570	590570	One Side	0103	0106	0101	74.9	57.2	50.8	20.7	20.3	8.3	11.5	35.1	11.4
			Both Sides	0104	0107	0102	74.9	57.2	50.8	20.7	20.3	8.3	11.5	35.1	11.4
S45	180581	590581	One Side	0103	0106	0101	74.9	57.2	50.8	20.7	20.3	8.3	11.5	35.1	11.4
			Both Sides	0104	0107	0102	74.9	57.2	50.8	20.7	20.3	8.3	11.5	35.1	11.4
S62	180558	590558	One Side	0103	0106	0101	95.3	73.0	60.3	21.0	21.0	8.3	14.7	38.1	11.4
			Both Sides	0104	0107	0102	95.3	73.0	60.3	21.0	21.0	8.3	14.7	38.1	11.4
S77	180671	590671	One Side	0103	0106	0101	101.6	79.4	73.0	29.2	25.4	8.3	11.5	40.1	20.8
			Both Sides	0104	0107	0102	101.6	79.4	73.0	29.2	25.4	8.3	11.5	40.1	20.8
S88	180708	590708	One Side	0103	0106	0101	119.4	98.4	95.3	33.1	31.8	8.3	9.9	46.5	20.8
			Both Sides	0104	0107	0102	119.4	98.4	95.3	33.1	31.8	8.3	9.9	46.5	20.8
CA550	184959	-	One Side	-	0106	0101	76.1	54.0	-	20.7	25.0	8.6	-	-	12.7
			Both Sides	-	0107	0102	76.1	54.0	-	20.7	25.0	8.6	-	-	12.7

Works Standard K Attachment

Chain							Technical Details								
			Type	Joint No Inner	Joint No Outer	Joint No Con Link	A	Max B	Min B	C	D	E	F	G	H
#	-	-	K1	-	-	-	73.0	57.0	-	19.2	20.0	6.5	-	-	10.7
#	-	-	K2	-	-	-	73.0	57.0	-	19.2	20.0	8.5	-	-	10.7
#	-	-	K3	-	-	-	78.0	57.0	-	19.2	20.0	8.5	-	-	16.0
#	-	-	K9	-	-	-	81.5	57.0	-	19.2	40.0	10.5	-	-	16.0
#	-	-	KV1	-	-	-	86.0	57.0	-	19.2	40.0	10.5	-	-	14.0
*	-	-	K1	-	-	-	90.4	63.5	69.9	20.7	25.0	8.3	-	-	15.5

AVAILABLE ON CHAINS 3840, 3840B, 3840S.
* AVAILABLE ON CHAIN 184919 AND 590919. DESIGNED TO ISO 487 ATTACHMENT STYLE.

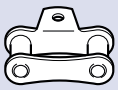

No 0103

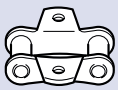

No 0104

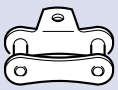

No 0106

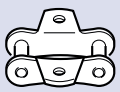

No 0107

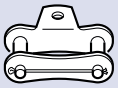

No 0101

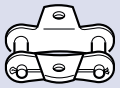

No 0102

Agricultural Chain

M Attachments

ISO 487 ATTACHMENT

M1

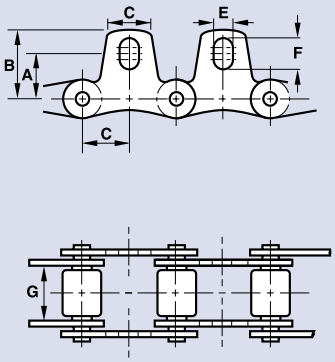

WORKS STANDARD ATTACHMENT

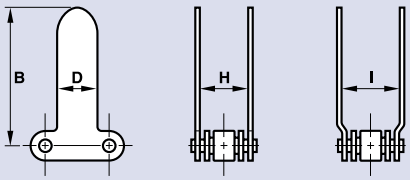

M5 - M6 - M7 - M8

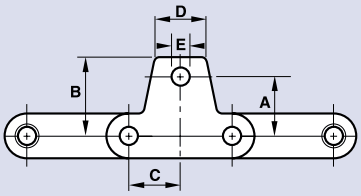

M3

ISO 487 M Attachment

Chain				Technical Details								
ISO No	STD Chain No	Extra Strength Chain No	Type	A	B	C	D	E	F	G	H	I
S32	180 488	590488	M1	17.3	26.2	14.6	14.0	5.3	6.9	24.4	-	-
S42	180 519	590519	M1	23.6	34.3	17.5	17.8	8.3	11.5	31.8	-	-
S52	180 538	590538	M1	22.1	31.8	19.1	19.0	8.3	9.9	35.1	-	-
S55	180 570	590570	M1	19.8	30.2	30.2	20.3	8.3	11.5	35.1	-	-
S45	180 581	590581	M1	19.8	30.2	30.2	20.3	8.3	11.5	35.1	-	-
S62	180 558	590558	M1	24.6	38.6	21.0	22.1	8.3	14.7	38.1	-	-
S77	180 671	590671	M1	36.3	50.0	29.2	25.4	8.3	11.5	40.1	-	-
S88	180 708	590708	M1	43.7	55.6	33.1	31.8	8.3	9.9	46.5	-	-

Works Standard M Attachment

Chain				Technical Details								
			Type	A	B	C	D	E	F	G	H	I
-	*	-	M3	27.5	38.0	19.2	20.0	8.5	-	-	-	-
-	*	-	M5	-	86.0	-	24.0	-	-	-	24.4	-
-	*	-	M6	-	103.6	-	24.0	-	-	-	24.4	-
-	*	-	M7	-	85.3	-	24.0	-	-	-	-	30.0
-	*	-	M8	-	102.9	-	24.0	-	-	-	-	30.0

* AVAILABLE ON CHAINS 3840, 3840B, 3840S, 3840V

F1 or K4 ATTACHMENT

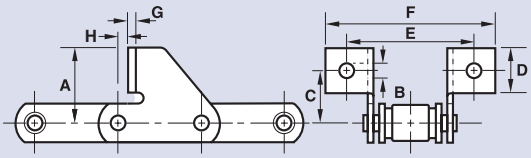

ISO 487 F Attachment

Chain | Dimensions

ISO No	STD Chain No	Extra Strength Chain No	Type	A	B	C	D	E	F	G	H
S55	180570	590570	F1	32.0	6.5	20.0	21.7	58.0	90.0	2.5	8.0
S45	180581	590581	F1	32.0	6.5	20.0	21.7	58.0	90.0	2.5	8.0
CA550	184959	-	F1	37.0	6.5	20.0	27.0	58.0	90.0	3.0	8.0

Works Standard F Attachment

Chain | Dimensions

Works No	STD Chain No	Extra Strength Chain No	Type	A	B	C	D	E	F	G	H
3840	590703	-	F1 (K4)	34.5	8.4	24.0	21.0	52.0	70.0	2.5	2.0
3840S	-	590705	F1 (K4)	34.5	8.4	24.0	21.0	52.0	70.0	2.5	2.0
3840B	590709	-	F1 (K4)	34.5	8.4	24.0	21.0	52.0	70.0	2.5	2.0
3840V	590715	-	F1 (K4)	36.0	8.4	24.0	20.0	52.0	72.0	3.0	1.5

Agricultural Chain

Cornpicker Attachments

CORNPICKER ATTACHMENT - 3000 MP

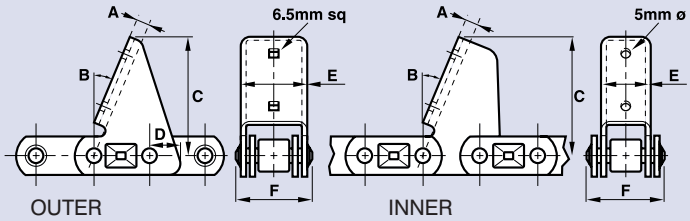

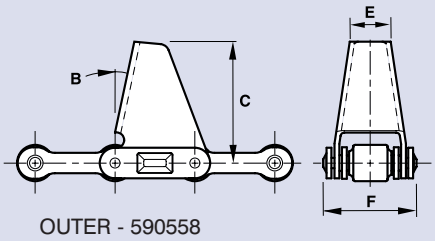

Cornpicker Attachment

Chain Technical Details

Chain Type	Link Type	A	B	C	D	E	F
3000MP	Inner	6.5	22.5°	62.5	-	25.9	25.5
	Outer	6.5	22.5°	64.0	17.2	32.0	36.0
590558		-	12°	63.5	-	22.0	48.0

CORNPICKER ATTACHMENTS SIMILAR TO THOSE SHOWN ABOVE ARE AVAILABLE ON OTHER AGRICULTURAL CHAINS. PLEASE ENQUIRE FOR FULL DETAILS.

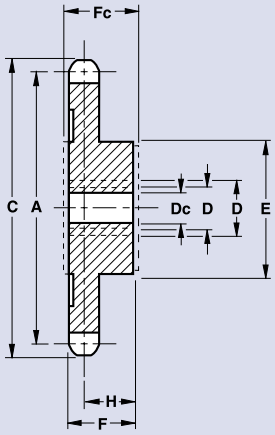

For Chain No 180488 and 590488

No. of Teeth	Part No	P.C.D. A	Top Dia C	BORE Stock Cast Dc	BORE Min. Machined D	BORE Max. Machined D	BOSS Dia E	BOSS Length Cast Fc	BOSS Length Machined F	Chain ℄ from Boss Face when Machined H	Weight (Cast Bore) kg
9	281063*	85.39	94	-	-	38	64	41	38	31.0	1.13
10	281064*	94.51	103	-	-	38	70	41	38	31.0	1.36
11	281065*	103.68	113	-	-	38	70	41	38	31.0	1.47
12	281066*	112.85	122	-	-	38	70	41	38	31.0	1.59
14	281068*	131.27	140	-	-	45	76	41	38	31.0	2.15
15	281069*	140.49	149	-	-	45	76	41	38	31.0	2.38
16	281070*	149.73	159	-	-	45	76	41	38	31.0	2.49
18	281072	168.22	177	-	-	45	76	41	38	31.0	2.61
27	281078	251.61	261	19	24	50	89	51	44	32.0	4.54
30	281080	279.45	288	19	24	50	89	51	44	32.0	4.99
34	281082	316.59	325	19	24	50	89	51	44	32.0	5.44

For Chain No 180538 and 590538

9	281123*	111.40	125	-	-	48	83	54	51	41.0	2.38
10	281124*	123.39	136	-	-	50	89	54	51	41.0	2.84
11	281125*	135.23	148	-	-	50	89	54	51	41.0	3.29
12	281126*	147.22	161	-	-	50	89	54	51	41.0	3.63
13	281127*	159.21	172	-	-	50	89	54	51	41.0	4.08
14	281128*	171.22	184	-	-	60	102	54	51	41.0	4.99
15	281129*	183.26	197	-	-	60	102	54	51	41.0	5.44
16	281130	195.30	209	19	24	60	102	57	51	41.0	5.44
17	281131	207.34	220	19	24	60	102	57	51	41.0	5.67
18	281132	219.41	233	19	24	60	102	57	51	41.0	5.90
27	281138	328.19	341	24	28	65	108	64	57	41.5	9.07
30	281140	364.49	378	24	28	65	108	64	57	41.5	9.98
34	281142	412.93	426	24	28	70	121	64	57	41.5	13.15

For Chain No 590581

9	281093*	121.06	134	-	-	50	89	54	51	41.0	2.95
10	281094*	133.99	147	-	-	50	89	54	51	41.0	3.29
12	281096*	159.97	173	-	-	50	89	54	51	41.0	4.08
15	281099	199.14	212	19	24	60	102	57	51	41.0	5.44
18	281102	238.43	252	19	24	60	102	57	51	41.0	6.58
27	281108	356.62	370	24	28	65	108	64	57	41.5	9.98
30	281110	396.09	409	24	28	65	108	64	57	41.5	10.89
34	281112	448.72	462	24	28	70	121	70	64	48.0	14.51

* SMALL SOLID SPROCKETS.
OTHER SPROCKETS AVAILABLE ON REQUEST.

SPROCKETS CAN BE MODIFIED ON REQUEST. WHEN KEYWAYS ARE REQUESTED, LARGE SPROCKETS ARE FACED BOTH SIDES OF THE BOSS - SMALL SOLID SPROCKETS ARE FACED ON BOSS SIDE ONLY. SPROCKETS FOR OTHER SIZES OF CHAIN - DETAILS ON REQUEST.

Agricultural Chain

Standard Sprockets

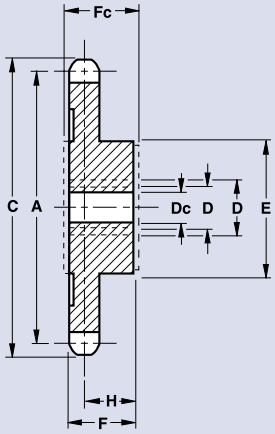

For Chain No 180558 and 590558

No of Teeth	Part No	P.C.D. A	Top Dia C	BORE Stock Cast Dc	BORE Min. Machined D	BORE Max. Machined D	BOSS Dia E	BOSS Length Cast Fc	BOSS Length Machined F	Chain ℄ from Boss Face when Machined H	Weight (Cast Bore) kg
9	281153*	122.53	135	-	-	50	89	60	57	46.0	3.29
10	281154*	135.64	149	-	-	60	102	60	57	46.0	4.31
11	281155*	148.77	162	-	-	60	102	60	57	46.0	4.99
12	281156*	161.93	175	-	-	60	102	60	57	46.0	5.44
13	281157*	175.13	188	-	-	60	102	60	57	46.0	6.12
14	281158*	188.34	201	-	-	65	108	60	57	46.0	6.58
15	281159	201.57	215	19	24	65	108	64	57	46.0	7.03
16	281160	214.83	228	19	24	65	108	64	57	46.0	7.26
17	281161	228.09	241	19	24	65	108	64	57	46.0	7.71
18	281162	241.35	254	19	24	65	108	64	57	46.0	8.16
27	281168	361.01	374	24	28	70	121	70	64	46.5	12.70
30	281170	400.94	414	24	28	70	121	70	64	46.5	14.06
34	281172	454.23	467	24	28	75	133	76	70	53.0	19.05

* SMALL SOLID SPROCKETS.
OTHER SPROCKETS AVAILABLE ON REQUEST.

SPROCKETS CAN BE MODIFIED ON REQUEST. WHEN KEYWAYS ARE REQUESTED, LARGE SPROCKETS ARE FACED BOTH SIDES OF THE BOSS - SMALL SOLID SPROCKETS ARE FACED ON BOSS SIDE ONLY. SPROCKETS FOR OTHER SIZES OF CHAIN - DETAILS ON REQUEST.

RENOLD

SECTION 2

CONVEYOR SPROCKET DETAILS

Conveyor Sprocket Details

General Description

The normal function of a chain sprocket is not only to drive or be driven by the chain, but also to guide and support it in its intended path.

Sprockets manufactured from good quality iron castings are suitable for the majority of applications. For arduous duty, it may be necessary to use steel sprockets having a 0.4% carbon content. For extremely arduous duty the tooth flanks should be flame hardened. There are other materials which may be specified for particular requirements. Stainless steel for example is used in high temperature or corrosive conditions.

Table 1 gives a guide to the material required.

Table 1

Normal Conditions	Moderate Shock Loading	Heavy Shock Loading	Abrasion, No Shock Loading	Abrasion and Heavy Shock Loading
Cast Iron or Fabricated Steel	Cast Iron or Fabricated Steel	0.4% Carbon Steel	Cast Iron	0.4% Carbon Steel with hardened teeth

The vast majority of sprockets in use are of the one piece cast iron or fabricated steel design and are usually parallel or taper keyed to a through shaft. In this case it is necessary to remove the complete shaft to be able to remove the sprockets.

Fig. 1

CAST SPROCKET

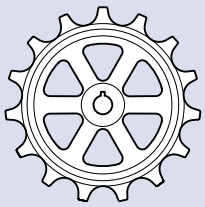

SEGMENTAL SPROCKET

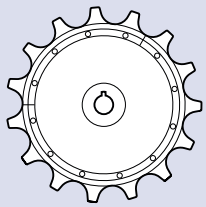

SPLIT SPROCKET

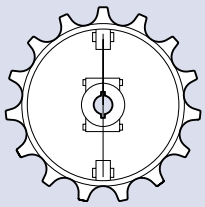

If quick detachability is necessary without dismantling shafts or bearings then sprockets may be of the split type. These are made in two half sections and the mating faces machined to allow accurate assembly with the shaft in place. This type of sprocket is particularly useful on multistrand conveyors where long through-shafts are used. Considerable expense can be saved in sprocket replacement time.

Sprockets with removable tooth segments are particularly useful where sprocket tooth wear is much more rapid than chain wear. With this type of sprocket, segments of teeth can be replaced one at a time without having to disconnect or remove the chain, thus considerable expense and downtime can be saved.

Shafts, whether they are through shafts or of the stub type, should be of such proportions and strength that sprocket alignment remains unimpaired under load. Shaft sizes should be selected taking into account combined bending and torsional moments.

Sprocket dimensions

Salient sprocket dimensions are shown in fig. 2.

Fig. 2

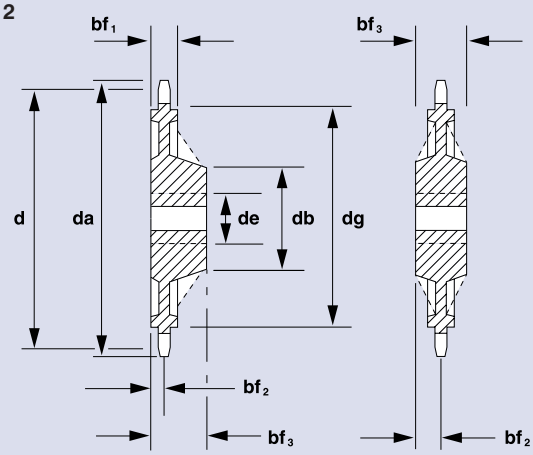

d	=	Pitch circle diameter
da	=	Top diameter
db	=	Boss diameter
de	=	Bore diameter
dg	=	Shroud diameter
bf_1	=	Shroud width
bf_2	=	Face to sprocket centreline
bf_3	=	Distance through boss

The pitch circle diameter is a circle drawn through the bearing pin centres when a length of chain is wrapped round a sprocket. Table 2 shows pitch circle diameters for sprockets to suit a chain of unit pitch. The pitch circle diameters for sprockets to suit a chain of any other pitch are directly proportional to the pitch of the chain.
i.e. unit PCD x Chain Pitch = Sprocket PCD.

Table 2

No. of teeth	Unit pitch circle diameter	No. of teeth	Unit pitch circle diameter	No. of teeth	Unit pitch circle diameter
6	2.000	21	6.709	36	11.474
7	2.305	22	7.027	37	11.792
8	2.613	23	7.344	38	12.110
9	2.924	24	7.661	39	12.428
10	3.236	25	7.979	40	12.746
11	3.549	26	8.296	41	13.063
12	3.864	27	8.614	42	13.382
13	4.179	28	8.931	43	13.700
14	4.494	29	9.249	44	14.018
15	4.810	30	9.567	45	14.336
16	5.126	31	9.885	46	14.654
17	5.442	32	10.202	47	14.972
18	5.759	33	10.520	48	15.290
19	6.076	34	10.838	49	15.608
20	6.392	35	11.156	50	15.926

Tooth form

For most applications sprocket teeth as cast and unmachined are satisfactory, but machine cut teeth may however be preferable as referred to later. In conjunction with the chain rollers, the shape of the teeth facilitates a smooth gearing action. The teeth shape, whether cast or cut, is based on chain roller diameter and pitch for each specific chain. To ensure easy entry and exit of the chain the teeth have a radius on their outside faces at the periphery (fig. 3 below).

Where an application calls for a size of sprocket and a number of teeth that are not contained within the stock sprocket range then fabricated steel sprockets are supplied with flame cut teeth. The accuracy of flame cut tooth forms is usually better than the cast tooth form and has generally replaced it for non-stock sprockets. If necessary, fabricated sprockets can be manufactured from medium carbon steel and the teeth can then be flame hardened to give a very tough, hard-wearing surface.

In some handling equipment such as elevators and scraper conveyors, both the chain and sprockets have to operate in contact with bulk material. This is liable to enter the spaces between chain rollers and sprocket teeth, where the roller pressure can cause it to pack. If this is allowed to occur the chain then takes up a larger pitch circle diameter leading to excessive chain tension, and possibly breakage. This packing effect can be minimised by relieving the tooth gap as shown in fig. 3.

Fig. 3

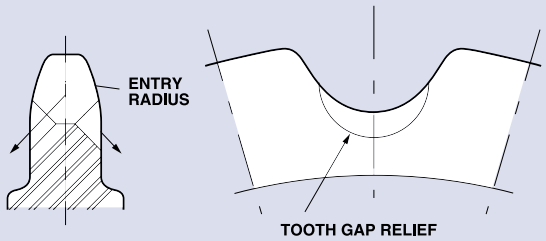

Machine cut teeth with their closer tolerances are employed in the class of applications listed because of their greater accuracy.

- High speed applications with chain speed in excess of about 0.9m/s.
- Where synchronisation of the chain to a predetermined stopping position is required, with the angular sprocket movement as the controlling mechanism.
- Where numerous sprockets are employed in a closed circuit and variations in tooth form and pitch circle diameter could result in a tendency to tighten or slacken the chain on straight sections. This applies particularly where the sprockets are closely spaced in either the horizontal or vertical planes or in close proximity in combined planes.
- Where the linear chain speed variation has to be reduced to a minimum.

Number of teeth

For the majority of conveyor applications, experience shows that eight teeth represents a reasonable minimum size for sprockets. Below this the effect of polygonal speed variation is pronounced. Table 3 indicates the normal range of sprockets for conveyors and elevators.

Table 3

Application	Normal range of sprockets		
	No. of teeth		
Slat, Bar, Steel Apron, Wire Mesh or similar Conveyors	8-12		
Tray, Soft Fruit and similar elevators	8-12		
Cask, Package and similar elevators	8-12		
Swing tray elevators	16-24		
Ore feed conveyors	6-8		
Scraper conveyors	8-12		
Box scraper conveyors	8-16		
	Normal minimum number of teeth in sprocket		
Bucket elevators	Head	Boot	Deflector
Spaced Bucket			
High speed; vertical (one or two chains)	14	11	
Medium speed; inclined (one or two chains)	14	11	
Slow speed; vertical (two chains)	12	11	9
Continuous Bucket			
Medium speed; vertical or inclined (one or two chains)	8	8	
Slow speed; vertical or inclined (two chains)	8	8	
	Driver	Top Corner	Follower
Gravity Bucket Conveyor/Elevator	12	12	8

Standard Conveyor Sprockets

To Suit BS4116 Part 4

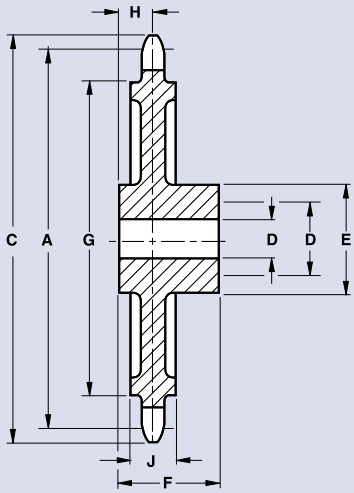

3000 lbf, 13000 Newtons Breaking Load

SPROCKETS Technical Details

Pitch Inch	mm	No. of Teeth	Renold Part No.	PCD A	Top Dia C	Shroud Dia G	Shroud Width J	Bore Dia Min D	Bore Dia Max D	Boss Dia E	℄ of Tooth to End Face* H	Distance Through* F	Weight Approx kg
12.1mm Diameter Roller													
1.5	38.1	8	208121#	99.57	109	-	-	16	32	57	9.5	38	0.9
		12	208125#	147.22	157	-	-	16	38	76	9.5	45	2.0
2.0	50.8	8	208212#	132.74	142	-	-	24	38	76	9.5	45	1.8
		12	208216#	196.27	207	156	19	24	45	89	9.5	51	3.9
3.0	76.2	8	208391#	199.11	208	150	19	24	45	89	9.5	51	3.7
		12	208395#	294.41	305	250	19	24	45	89	9.5	51	7.9
25.4mm Diameter Roller													
1.5	38.1	8	208151##	99.57	105	-	-	16	32	57	9.5	38	0.9
		12	208155##	147.22	157	-	-	16	38	76	9.5	45	2.0
2.0	50.8	8	208241##	132.74	142	-	-	24	38	76	9.5	45	1.8
		12	208245##	196.27	207	156	19	24	45	89	9.5	51	3.9
3.0	76.2	8	208422##	199.11	208	150	19	24	45	89	9.5	51	3.7
		12	208426##	294.41	306	250	19	24	45	89	9.5	51	7.9
4.0	101.6	8	208501##	265.51	274	212	19	24	45	89	9.5	51	7.0
		12	208505##	392.56	404	345	19	24	50	102	9.5	64	12.2

SPROCKETS WITH CUT TEETH ## SPROCKETS WITH CAST TEETH

* AFTER MACHINE FACING THE BOSS

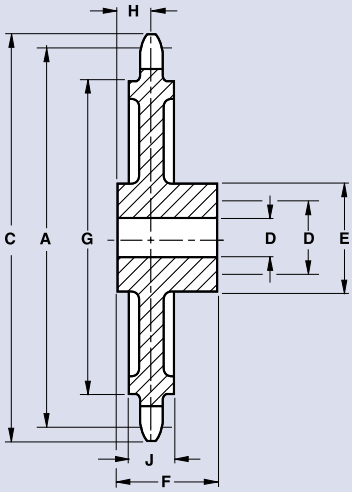

4500 lbf, 20000 Newtons Breaking Load

SPROCKETS Technical Details

Pitch Inch	mm	No. of Teeth	Renold Part No.	PCD A	Top Dia C	Shroud Dia G	Shroud Width J	Bore Dia Min D	Bore Dia Max D	Boss Dia E	℄ of Tooth to End Face* H	Distance Through* F	Weight Approx kg
25.4mm Diameter Roller													
1.5	38.1	8	208151##	99.57	105	-	-	16	32	57	9.5	38	0.9
		12	208155##	147.22	157	-	-	16	38	76	9.5	45	2.0
2.0	50.8	8	208241##	132.74	142	-	-	24	38	76	9.5	45	1.8
		12	208245##	196.27	207	156	19	24	45	89	9.5	51	3.9
3.0	76.2	8	208422##	199.11	208	150	19	24	45	89	9.5	51	3.7
		12	208426##	294.41	306	250	19	24	45	89	9.5	51	7.9

6000 lbf, 27000 Newtons and 7500 lbf, 33000 Newtons Breaking Load

SPROCKETS Technical Details

Pitch Inch	mm	No. of Teeth	Renold Part No.	PCD A	Top Dia C	Shroud Dia G	Shroud Width J	Bore Dia Min D	Bore Dia Max D	Boss Dia E	℄ of Tooth to End Face* H	Distance Through* F	Weight Approx kg
2.0	50.8	8	200121##	132.74	144	-	-	24	38	76	12.5	51	2.3
		12	200125##	196.27	212	-	-	24	50	102	12.5	51	5.4
3.0	76.2	8	200302##	199.11	215	-	-	24	50	102	12.5	51	5.4
		10	200304##	246.58	264	193	25	28	65	114	12.5	64	8.6
		12	200306##	294.41	314	243	25	28	65	114	12.5	64	10.0
4.0	101.6	8	200392##	265.51	281	204	25	35	65	114	12.5	64	8.6
		10	200394##	328.78	347	272	25	35	65	114	12.5	64	13.8
		12	200396##	392.56	411	338	25	38	70	127	12.5	70	16.1
6.0	152.4	8	200571##	398.25	414	326	25	38	70	127	12.5	70	19.7
		12	200575##	588.82	608	527	25	38	75	133	12.5	76	34.2

SPROCKETS WITH CAST TEETH

* AFTER MACHINE FACING THE BOSS

Standard Conveyor Sprockets

To Suit BS4116 Part 4

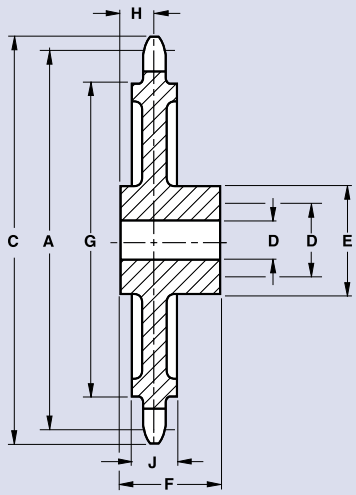

12000 lbf, 54000 Newtons and 15000 lbf, 67000 Newtons Breaking Load

SPROCKETS Technical Details

Pitch Inch	mm	No. of Teeth	Renold Part No.	PCD A	Top Dia C	Shroud Dia G	Shroud Width J	Bore Dia Min D	Bore Dia Max D	Boss Dia E	℄ of Tooth to End Face* H	Distance Through* F	Weight Approx kg
3.0	76.2	8	201211##	199.11	218	-	-	38	70	114	16	70	8.4
		12	201215##	294.41	318	230	32	38	75	133	16	76	15.0
4.0	101.6	8	201301##	265.51	286	192	32	38	70	127	16	70	10.9
		12	201305##	392.56	415	325	32	48	80	140	16	76	20.2
6.0	152.4	8	201481##	398.25	418	314	32	48	80	140	16	76	21.5
		12	201485##	588.82	612	514	32	48	90	165	16	89	41.3

24000 lbf, 107000 Newtons and 30000 lbf, 134000 Newtons Breaking Load

SPROCKETS Technical Details

Pitch Inch	mm	No. of Teeth	Renold Part No.	PCD A	Top Dia C	Shroud Dia G	Shroud Width J	Bore Dia Min D	Bore Dia Max D	Boss Dia E	℄ of Tooth to End Face* H	Distance Through* F	Weight Approx kg
4.0	101.6	8	202121##	265.51	290	-	-	48	85	152	19	83	16.6
		12	202125##	392.56	420	312	38	55	95	165	19	95	31.3
6.0	152.4	8	202301##	398.25	423	301	38	55	95	165	19	95	32.2
		12	202305##	588.82	617	502	38	60	110	196	19	130	63.0

SPROCKETS WITH CAST TEETH

* AFTER MACHINE FACING THE BOSS

TYPE W

Permaweld chains are normally of cranked link construction. The pins have a press fit into the side plates, thus eliminating unnecessary wear due to pin movement. Accurate punching of the plate, automated machine welding and assembly of the bushes to side plates ensures high quality and dimensional control. Steels of medium carbon grades are used for pin and plates and may be heat treated to produce greater strength and wear resistance. Bushes are of carburizing grades of carbon steel which may be case hardened.

Permaweld W

Chain No.	Pitch mm	Pitch Inch	Mass kg/m	Average Ultimate Strength N	Pin Diameter	Sprocket Thickness max	Plate Thickness	Plate Height	Bush Diameter	CL to Pin Head	CL to Pin End	Outside Width at Inner Plate
							Dimensions in mm					
W-78	66.269	2.609	6.251	106762	12.700	28.575	6.350	28.575	22.225	36.116	40.084	50.800
W-78P	66.269	2.609	6.251	133452	12.700	28.575	6.350	28.575	22.225	36.116	40.081	50.800
W-82	78.105	3.075	7.442	115658	14.288	31.750	6.350	31.750	26.988	38.497	43.259	57.150
W-82P	78.105	3.075	7.442	155694	14.288	31.750	6.350	31.750	26.988	38.506	43.256	57.150
W-82XHD	78.105	3.075	13.097	204626	19.050	31.750	9.525	38.100	34.925	45.641	53.578	63.500
W-106	152.400	6.000	9.972	164591	19.050	41.275	9.525	38.100	34.925	49.609	56.753	71.438
W-106P	152.400	6.000	9.972	260231	19.050	41.275	9.525	38.100	34.925	49.606	56.744	71.450
W-106HD	152.400	6.000	12.204	222420	19.050	41.275	12.700	38.100	31.750	56.356	63.500	77.788
W-110	152.400	6.000	9.674	204626	19.050	47.625	9.525	38.100	31.750	51.991	59.134	76.200
W-110P	152.400	6.000	9.674	266904	19.050	47.625	9.525	38.100	36.513	51.994	59.131	76.200
W-111	120.900	4.760	12.204	204626	19.050	57.150	9.525	38.100	36.513	56.753	63.897	85.725
W-111P	120.900	4.760	12.204	266904	19.050	57.150	9.525	38.100	41.275	56.744	63.907	85.725
W-124	101.600	4.000	12.353	204626	19.050	41.275	9.525	38.100	41.275	49.606	56.744	71.438
W-124P	101.600	4.000	12.353	266904	19.050	41.275	9.525	38.100	41.275	49.606	56.744	71.450
W-124HD	103.200	4.063	20.241	373665	22.225	41.275	12.700	50.800	41.275	55.959	62.706	76.200
W-124HDP	103.200	4.063	20.241	400356	22.225	41.275	12.700	50.800	41.275	55.956	62.713	76.200
W-132	153.670	6.050	19.497	373665	25.400	73.025	12.700	50.800	41.275	74.216	82.550	111.125
W-132P	153.670	6.050	19.497	444840	25.400	73.025	12.700	50.800	41.275	74.219	82.550	111.125
W-132HD	153.670	6.050	22.920	467082	25.400	73.025	15.875	50.800	41.275	80.566	88.900	117.475
W-132HDP	153.670	6.050	22.920	533808	25.400	73.025	15.875	50.800	41.275	80.569	88.900	117.475
W-134	103.200	4.063	24.855	458185	25.400	41.275	12.700	63.500	41.275	56.744	62.706	76.200
W-134P	103.200	4.063	24.855	498221	25.400	41.275	12.700	63.500	41.275	56.744	62.713	76.200
WS-150	153.670	6.050	23.515	373665	25.400	73.025	12.700	63.500	44.450	74.219	82.550	111.125
WS-150P	153.670	6.050	23.515	444840	25.400	73.025	12.700	63.500	44.450	74.219	82.550	111.125
WS-157	153.670	6.050	29.022	556050	28.575	69.850	15.875	63.500	44.450	80.963	92.075	117.475
WS-157P	153.670	6.050	29.022	622776	28.575	69.850	15.875	63.500	44.450	80.975	92.075	117.475
W-182	78.105	3.075	12.353	204626	19.050	28.575	9.525	38.100	34.925	42.466	50.403	57.150
WS-784	101.600	4.000	4.911	106762	12.700	28.575	6.350	28.575	22.225	36.119	40.081	50.800
WS-784P	101.600	4.000	4.911	133452	12.700	28.575	6.350	28.575	22.225	36.119	40.081	50.800
WS-855PB	153.670	6.050	27.534	667260	28.575	69.850	14.288	63.500	44.450	76.994	89.694	112.713

A full range of attachments is available on request.

Welded Steel Drag Chain

TYPE WD

Type WD Permaweld drag chains are furnished with heat treated pins and formed steel bushes. The bushes are shaped to provide maximum conveying capacity, shock resistance, toughness and higher yield strength in bending than many comparable cast and other welded links. Precise press fits of the pins in the side plates and single flats milled on the pin ends prevent unnecessary wear due to pin movement.

Pins and side plates are made of medium carbon steels. Bushes are of carburizing grade steels which are case hardened on the heat treated chains. Accurately punched holes and assembly procedures ensure dimensional control. The flexibility of welded construction provides a wider range of attachment links than is normally offered for similar cast chains.

Permaweld WD

Chain No.	Pitch mm	Pitch Inch	Mass kg/m	Average Ultimate Strength N	Pin Diameter	Sprocket Thickness max	Plate Thickness	Dimensions in mm Plate Height	CL to Pin Head	CL to Pin End	Outside Width at Inner Plate
WD-102	127.0	5.000	15.478	226868	19.050	161.925	9.525	38.100	113.903	121.047	196.850
WD-102P	127.0	5.000	15.478	266904	19.050	161.925	9.525	38.100	113.894	121.057	196.850
WD-104	76.2	3.000	11.758	226868	19.050	104.775	9.525	38.100	83.741	90.885	136.525
WD-104P	76.2	3.000	11.758	266904	19.050	104.775	9.525	38.100	83.744	90.881	136.525
WD-110	76.2	3.000	16.074	226868	19.050	228.600	9.525	38.100	147.241	154.385	263.526
WD-110P	76.2	3.000	16.074	266904	19.050	228.600	9.525	38.100	147.244	154.382	263.526
WD-112	203.2	8.000	13.544	226868	19.050	228.600	9.525	38.100	147.241	154.385	263.526
WD-112P	203.2	8.000	13.544	266904	19.050	228.600	9.525	38.100	147.244	154.382	263.526
WD-116	203.2	8.000	20.985	226868	19.050	330.201	9.525	44.450	194.866	202.010	358.776
WD-116P	203.2	8.000	20.985	306940	19.050	330.201	9.525	44.450	194.869	202.007	358.776
WD-120	152.4	6.000	26.939	311388	22.225	222.250	12.700	50.800	150.019	156.369	260.351
WD-120P	152.4	6.000	26.939	400356	22.225	222.250	12.700	50.800	150.013	156.363	260.351
WD-122	203.2	8.000	22.771	311388	22.225	222.250	12.700	50.800	150.013	156.369	260.351
WD-122P	203.2	8.000	22.771	400356	22.225	222.250	12.700	50.800	150.013	156.363	260.351
WD-480	203.2	8.000	25.450	311388	22.225	282.576	12.700	50.800	181.769	188.119	323.851
WD-480P	203.2	8.000	25.450	400356	22.225	282.576	12.700	50.800	181.763	188.113	323.851
WD-480HP	203.2	8.000	27.980	449288	25.400	282.576	12.700	50.800	181.763	188.113	323.851
WD-480XHD	203.2	8.000	31.255	378114	25.400	282.576	15.875	50.800	188.119	194.469	330.201
WD-480XDHP	203.2	8.000	31.255	542705	25.400	282.576	15.875	50.800	188.113	194.463	330.201